ALDEN a verdantas company

"Engineering with Distinction"
ELECTRICAL CONSULTANTS, INC.

WOODLAND FISH LIFT PASSAGE

WOODLAND PULP, LLC
WOODLAND, MAINE

ISSUED FOR CONSTRUCTION
03/28/2025

REVISION					
REV	DATE	DR	CK	AP	DESCRIPTION
0	03/28/2025	SAM	CMM	CMH	ISSUED FOR CONSTRUCTION

"Engineering with Distinction"
ELECTRICAL CONSULTANTS, INC.

THIS DRAWING IS THE PROPERTY OF ELECTRICAL CONSULTANTS, INC. AND IS TO BE USED ONLY FOR THE SPECIFIC PROJECT IDENTIFIED ON THE DRAWING. NO REVISIONS SHALL BE MADE WITHOUT THE EXPRESSED WRITTEN CONSENT OF ELECTRICAL CONSULTANTS, INC.

DRAWN BY: SAM	DATE: 02/22/2024	WOODLAND PULP, LLC WOODLAND FISH LIFT PASSAGE	
CHECKED BY: CMM	DATE: 02/22/2024	COVER SHEET FISH LIFT PASSAGE	
APPROVED BY: CMH	DATE: 02/22/2024	TECHNOLOGY: HYDRO	DRAWING CATEGORY: GENERAL
SCALE: NONE	PROJECT NO.: ARL-007	DWG: EE-AA-001	REV: 0

DRAWING LIST

REV	DRAWING No.	DRAWING TITLE
0	EE-AA-001	COVER SHEET - FISH LIFT PASSAGE
0	EE-AB-001	DRAWING LIST - SHEET 1 - FISH LIFT PASSAGE
0	EE-AB-002	DRAWING LIST - SHEET 2 - FISH LIFT PASSAGE
0	EE-AC-001	BILL OF MATERIALS - FISH LIFT PASSAGE
0	EE-AD-001	SYMBOL LEGEND AND NOTES - FISH LIFT PASSAGE
0	EE-AE-001	CABLE SCHEDULE - 480VAC POWER CABLES
0	EE-AE-002	CABLE SCHEDULE - 208/120VAC POWER CABLES
0	EE-AE-003	CABLE SCHEDULE - DIGITAL CONTROL CABLES
0	EE-AE-004	CABLE SCHEDULE - ANALOG CONTROL AND COMMUINICATION CABLES
0	EE-AE-005	CABLE SCHEDULE - MISC. CABLES
0	EE-BA-001	ONE LINE DIAGRAM - 480VAC FISH LIFT SERVICE AND POWER DISTRIBUTION
0	EE-BA-002	ONE LINE DIAGRAM - 208/120VAC POWER DISTRIBUTION
0	EE-BB-001	NETWORK SYSTEM ARCHITECTURE - FISH LIFT PASSAGE
0	EE-CA-001	GENERAL ARRANGEMENT PLAN - FISH LIFT PASSAGE SITE
0	EE-CA-002	GENERAL ARRANGEMENT PLAN - FISH LIFT AREA
0	EE-CA-003	GENERAL ARRANGEMENT PLAN - DOWNSTREAM FISH BYPASS AREA
0	EE-CA-004	GENERAL ARRANGEMENT PLAN - EXIT FLUME AND FISH LADDER AREAS
0	EE-CA-005	GENERAL ARRANGEMENT PLAN - FISH LADDER AREA
0	EE-CA-007	GENERAL ARRANGEMENT PLAN - FISH LADDER VIEWING BUILDING
0	EE-CA-008	GENERAL ARRANGEMENT PLAN - FISH LIFT CONTROL BUILDING
0	EE-CA-009	GENERAL ARRANGEMENT ELEVATION - FISH LIFT CONTROL BUILDING
0	EE-CB-000	LIGHTING AND POWER LEGEND SHEET - FISH LIFT PASSAGE
0	EE-CB-001	LIGHTING AND POWER PLAN - FISH LIFT PASSAGE SITE
0	EE-CB-002	LIGHTING AND POWER PLAN - FISH LIFT AREA
0	EE-CB-003	LIGHTING AND POWER PLAN - DOWNSTREAM FISH BYPASS AREA
0	EE-CB-004	LIGHTING AND POWER PLAN - EXIT FLUME AND FISH LADDER AREAS
0	EE-CB-005	LIGHTING AND POWER PLAN - FISH LADDER AREA
0	EE-CB-007	LIGHTING AND POWER PLAN - FISH LADDER VIEWING BUILDING
0	EE-CB-008	LIGHTING AND POWER PLAN - FISH LIFT CONTROL BUILDING
0	EE-CB-010	LIGHTING AND POWER PLAN - FISH LIFT TOWER - GRADE LEVEL
0	EE-CB-011	LIGHTING AND POWER PLAN - FISH LIFT TOWER - LOWER LEVELS
0	EE-CB-012	LIGHTING AND POWER PLAN - FISH LIFT TOWER - MIDDLE LEVELS
0	EE-CB-013	LIGHTING AND POWER PLAN - FISH LIFT TOWER - UPPER LEVELS

DRAWING LIST

REV	DRAWING No.	DRAWING TITLE
0	EE-CE-001	EQUIPMENT LAYOUT - FRONT ELEVATION - FISH LIFT MOTOR CONTROL CENTER (FLMCC)
0	EE-CE-002 SH1	EQUIPMENT LAYOUT - FRONT ELEVATION - FISH LIFT CONTROL PANEL (FLCP)
0	EE-CE-002 SH2	EQUIPMENT LAYOUT - FRONT ELEVATION (TOP) - FISH LIFT CONTROL PANEL (FLCP)
0	EE-CE-002 SH3	EQUIPMENT LAYOUT - FRONT ELEVATION (BOTTOM) - FISH LIFT CONTROL PANEL (FLCP)
0	EE-CE-002 SH4	EQUIPMENT LAYOUT - INTERIOR ELEVATION - FISH LIFT CONTROL PANEL (FLCP)
0	EE-CE-002 SH5	EQUIPMENT LAYOUT - INTERIOR ELEVATION (TOP) - FISH LIFT CONTROL PANEL (FLCP)
0	EE-CE-002 SH6	EQUIPMENT LAYOUT - INTERIOR ELEVATION (BOTTOM) - FISH LIFT CONTROL PANEL (FLCP)
0	EE-CE-003	EQUIPMENT LAYOUT - FRONT ELEVATION - HOIST CONTROL STATIONS (UHCS & LHCS)
0	EE-CG-001	GROUNDING PLAN - FISH LIFT PASSAGE SITE
0	EE-CG-002	GROUNDING PLAN - FISH LIFT AREA
0	EE-CG-003	GROUNDING PLAN - DOWNSTREAM FISH BYPASS AREA
0	EE-CG-004	GROUNDING PLAN - EXIT FLUME AND FISH LADDER AREAS
0	EE-CG-005	GROUNDING PLAN - FISH LADDER AREA
0	EE-CG-006	GROUNDING PLAN - ACCESS ROAD BRIDGE AREA
0	EE-CG-008	GROUNDING PLAN - FISH LIFT CONTROL BUILDING
0	EE-CG-011	GROUNDING DETAILS - SHEET 1
0	EE-CG-012	GROUNDING DETAILS - SHEET 2
0	EE-CG-013	GROUNDING DETAILS - SHEET 3
0	EE-CJ-001	ABOVE GRADE RACEWAY PLAN - FISH LIFT PASSAGE SITE
0	EE-CJ-002	ABOVE GRADE RACEWAY PLAN - FISH LIFT AREA
0	EE-CJ-003	ABOVE GRADE RACEWAY PLAN - FISH LIFT CONTROL BUILDING AREA
0	EE-CJ-004	ABOVE GRADE RACEWAY PLAN - EXIT FLUME AREA
0	EE-CJ-005	ABOVE GRADE RACEWAY PLAN - DOWNSTREAM BYPASS AREA - SHEET 1
0	EE-CJ-006	ABOVE GRADE RACEWAY PLAN - DOWNSTREAM BYPASS AREA - SHEET 2
0	EE-CJ-009	ABOVE GRADE RACEWAY ELEVATION - FISH LIFT CONTROL BUILDING
0	EE-CJ-011	CABLE TRAY SECTIONS
0	EE-CJ-012	CABLE TRAY DETAILS
0	EE-CK-001	TERMINAL BLOCK DEVELOPMENT - LEFT SIDE - FISH LIFT CONTROL PANEL (FLCP)
0	EE-CK-002	TERMINAL BLOCK DEVELOPMENT - RIGHT SIDE - FISH LIFT CONTROL PANEL (FLCP)
0	EE-CK-003	TERMINAL BLOCK DEVELOPMENT - BOTTOM - FISH LIFT CONTROL PANEL (FLCP)
0	EE-CL-001	LIGHTNING PROTECTION - ELEVATION AT COLUMN 1
0	EE-CL-002	LIGHTNING PROTECTION - ELEVATION AT COLUMN 2
0	EE-CL-003	LIGHTNING PROTECTION - ELEVATION AT COLUMN 3

DRAWING DISCIPLINE:
AR = ARCHITECTURAL
CV = CIVIL
EE = ELECTRICAL
EV = ENVIRONMENTAL
ME = MECHANICAL
ST = STRUCTURAL

DRAWING CATEGORY:
A = GENERAL DRAWINGS
B = OVERVIEW DIAGRAMS
C = LAYOUT DRAWINGS
D = SCHEMATIC DIAGRAMS
E = WIRING DIAGRAMS
F = FABRICATION DRAWINGS
G = INTERCONNECTION DIAGRAMS
H = CONTROLS/INSTRUMENTATION
J = FUTURE
K = FUTURE

EE - AA - 001 SH1

DISCIPLINE — DRAWING CATEGORY — DRAWING SUB CATEGORY — SEQUENCE DRAWING NUMBER — USED IF SHEETS NEED TO BE INSERTED

DRAWING NUMBER LEGEND

REVISION

REV	DATE	DR	CK	AP	DESCRIPTION
0	03/28/2025	SAM	CMM	CMH	ISSUED FOR CONSTRUCTION

ELECTRICAL CONSULTANTS, INC.
"Engineering with Distinction"

THIS DRAWING IS THE PROPERTY OF ELECTRICAL CONSULTANTS, INC. AND IS TO BE USED ONLY FOR THE SPECIFIC PROJECT IDENTIFIED ON THE DRAWING. NO REVISIONS SHALL BE MADE WITHOUT THE EXPRESSED WRITTEN CONSENT OF ELECTRICAL CONSULTANTS, INC.

DRAWN BY: SAM	DATE: 02/22/2024	WOODLAND PULP, LLC WOODLAND FISH LIFT PASSAGE
CHECKED BY: CMM	DATE: 02/22/2024	DRAWING LIST - SHEET 1 FISH LIFT PASSAGE
APPROVED BY: CMH	DATE: 02/22/2024	TECHNOLOGY: HYDRO / DRAWING CATEGORY: GENERAL
SCALE: NONE	PROJECT NO.: ARL-007	DWG: EE-AB-001 / REV: 0

DRAWING LIST

REV	DRAWING No.	DRAWING TITLE
0	EE-DB-001	SCHEMATIC WIRING DIAGRAM - SHEET 1 - FISH LIFT E-STOP CIRCUIT
0	EE-DB-002	SCHEMATIC WIRING DIAGRAM - SHEET 2 - FISH LIFT E-STOP CIRCUIT
0	EE-DB-003	SCHEMATIC WIRING DIAGRAM - SHEET 3 - FISH LIFT E-STOP CIRCUIT
0	EE-DC-001	120VAC CONTROL POWER DISTRIBUTION - FISH LIFT CONTROL PANEL (FLCP)
0	EE-DC-002	24VDC CONTROL POWER DISTRIBUTION - FISH LIFT CONTROL PANEL (FLCP)
0	EE-DD-000	SCHEMATIC - FLCP PLC RACK 0, SLOT 0 - POWER SUPPLY AND CPU
0	EE-DD-001	SCHEMATIC - FLCP PLC RACK 0, SLOT 1 - ETHERNET/IP BRIDGE
0	EE-DD-002	SCHEMATIC - FLCP PLC RACK 0, SLOT 2 - ETHERNET/IP BRIDGE
0	EE-DD-003 SH1	SCHEMATIC - FLCP PLC RACK 0, SLOT 3 - ANALOG INPUT MODULE
0	EE-DD-003 SH2	SCHEMATIC - FLCP PLC RACK 0, SLOT 3 - ANALOG INPUT MODULE (CONT)
0	EE-DD-004 SH1	SCHEMATIC - FLCP PLC RACK 0, SLOT 4 - ANALOG INPUT MODULE
0	EE-DD-004 SH2	SCHEMATIC - FLCP PLC RACK 0, SLOT 4 - ANALOG INPUT MODULE (CONT)
0	EE-DD-005	SCHEMATIC - FLCP PLC RACK 0, SLOT 5 - ANALOG OUTPUT MODULE
0	EE-DD-006	SCHEMATIC - FLCP PLC RACK 0, SLOT 6 - ANALOG OUTPUT MODULE
0	EE-DD-007	SCHEMATIC - FLCP PLC RACK 0, SLOT 7 - DIGITAL INPUT MODULE
0	EE-DD-008	SCHEMATIC - FLCP PLC RACK 0, SLOT 8 - DIGITAL INPUT MODULE
0	EE-DD-009	SCHEMATIC - FLCP PLC RACK 0, SLOT 9 - HIGH-SPEED COUNTER MODULE
0	EE-DD-010	SCHEMATIC - FLCP PLC RACK 1, SLOT 0 - POWER SUPPLY & ETHERNET/IP BRIDGE
0	EE-DD-011	SCHEMATIC - FLCP PLC RACK 1, SLOT 1 - RELAY OUTPUT MODULE
0	EE-DD-012	SCHEMATIC - FLCP PLC RACK 1, SLOT 2 - RELAY OUTPUT MODULE
0	EE-DD-013	SCHEMATIC - FLCP PLC RACK 1, SLOT 3 - RELAY OUTPUT MODULE
0	EE-DD-014	SCHEMATIC - FLCP PLC RACK 1, SLOT 4 - RELAY OUTPUT MODULE
0	EE-DD-015	SCHEMATIC - FLCP PLC RACK 1, SLOT 5 - SLOT FILLER MODULE (SPARE SLOT)
0	EE-DD-016	SCHEMATIC - FLCP PLC RACK 1, SLOT 6 - DIGITAL INPUT MODULE
0	EE-DD-017	SCHEMATIC - FLCP PLC RACK 1, SLOT 7 - DIGITAL INPUT MODULE
0	EE-DD-018	SCHEMATIC - FLCP PLC RACK 1, SLOT 8 - DIGITAL INPUT MODULE
0	EE-DD-019	SCHEMATIC - FLCP PLC RACK 1, SLOT 9 - DIGITAL INPUT MODULE
0	EE-DK-001	ELEMENTARY WIRING DIAGRAM - FISH LIFT ENTRANCE ISOLATION GATE (IG1)
0	EE-DK-002	ELEMENTARY WIRING DIAGRAM - FISH LIFT ENTRANCE GATE (EG2)
0	EE-DK-003 SH1	ELEMENTARY WIRING DIAGRAM - V-GATE A (VG3A)
0	EE-DK-003 SH2	ELEMENTARY WIRING DIAGRAM - V-GATE B (VG3B)
0	EE-DK-004 SH1	ELEMENTARY WIRING DIAGRAM - HOPPER HOIST (HH4)
0	EE-DK-004 SH2	ELEMENTARY WIRING DIAGRAM - HOPPER HOIST (HH4)
0	EE-DK-006	ELEMENTARY WIRING DIAGRAM - EXIT FLUME ISOLATION GATE (IG6)
0	EE-DK-007	ELEMENTARY WIRING DIAGRAM - AWS US ISOLATION VALVE (AWSS7)
0	EE-DK-008	ELEMENTARY WIRING DIAGRAM - DS PASSAGE AWS ISOLATION VALVE (AWSS8)
0	EE-DK-009	ELEMENTARY WIRING DIAGRAM - AWS DS ISOLATION VALVE (AWSS9)
0	EE-DK-010	ELEMENTARY WIRING DIAGRAM - EXIT FLUME DS BYPASS ISOLATION GATE (IG10)
0	EE-DK-011	ELEMENTARY WIRING DIAGRAM - P&W ENTRANCE OVERSHOT WEIR GATE (OWG11)
0	EE-DK-012	ELEMENTARY WIRING DIAGRAM - P&W ENTRANCE ISOLATION GATE (IG12)
0	EE-DK-013	ELEMENTARY WIRING DIAGRAM - P&W EXIT OVERSHOT WEIR GATE (OWG13)
0	EE-DK-014	ELEMENTARY WIRING DIAGRAM - DS BYPASS KNIFE GATE VALVE (DSG14)
0	EE-DK-015	ELEMENTARY WIRING DIAGRAM - DS BYPASS KNIFE GATE VALVE (DSG15)
0	EE-DK-016	ELEMENTARY WIRING DIAGRAM - DS BYPASS ISOLATION GATE (DSG16)
0	EE-DK-017	ELEMENTARY WIRING DIAGRAM - P&W EXIT ISOLATION GATE (IG17)
0	EE-DK-018	ELEMENTARY WIRING DIAGRAM - TRAP GATE (TG18)
0	EE-DK-019	ELEMENTARY WIRING DIAGRAM - TRAP GATE (TG19)

DRAWING LIST

REV	DRAWING No.	DRAWING TITLE
0	EE-ED-001	WIRING DIAGRAM - FRONT PANEL - FISH LIFT CONTROL PANEL (FLCP)
0	EE-ED-002	WIRING DIAGRAM - INTERIOR - PLC RACK 0 - FISH LIFT CONTROL PANEL (FLCP)
0	EE-ED-003	WIRING DIAGRAM - INTERIOR - PLC RACK 1 - FISH LIFT CONTROL PANEL (FLCP)
0	EE-ED-004	WIRING DIAGRAM - INTERIOR - CONTROL RELAYS - FISH LIFT CONTROL PANEL (FLCP)
0	EE-ED-005	WIRING DIAGRAM - INTERIOR - AC AND DC POWER - FISH LIFT CONTROL PANEL (FLCP)
0	EE-ED-006	WIRING DIAGRAM - INTERIOR - LEFT SIDE - SHEET 1 - FISH LIFT CONTROL PANEL (FLCP)
0	EE-ED-007	WIRING DIAGRAM - INTERIOR - LEFT SIDE - SHEET 2 - FISH LIFT CONTROL PANEL (FLCP)
0	EE-ED-008	WIRING DIAGRAM - INTERIOR - LEFT SIDE - SHEET 3 - FISH LIFT CONTROL PANEL (FLCP)
0	EE-ED-009	WIRING DIAGRAM - INTERIOR - RIGHT SIDE - SHEET 1 - FISH LIFT CONTROL PANEL (FLCP)
0	EE-ED-010	WIRING DIAGRAM - INTERIOR - RIGHT SIDE - SHEET 2 - FISH LIFT CONTROL PANEL (FLCP)
0	EE-GK-001	INTERCONNECTION DIAGRAM - FISH LIFT ENTRANCE ISOLATION GATE (IG1)
0	EE-GK-002	INTERCONNECTION DIAGRAM - FISH LIFT ENTRANCE GATE (EG2)
0	EE-GK-003 SH1	INTERCONNECTION DIAGRAM - V-GATE A (VG3A)
0	EE-GK-003 SH2	INTERCONNECTION DIAGRAM - V-GATE B (VG3B)
0	EE-GK-004	INTERCONNECTION DIAGRAM - HOPPER HOIST (HH4)
0	EE-GK-006	INTERCONNECTION DIAGRAM - EXIT FLUME ISOLATION GATE (IG6)
0	EE-GK-007	INTERCONNECTION DIAGRAM - AWS US ISOLATION VALVE (AWSS7)
0	EE-GK-008	INTERCONNECTION DIAGRAM - DS PASSAGE AWS ISOLATION VALVE (AWSS8)
0	EE-GK-009	INTERCONNECTION DIAGRAM - AWS DS ISOLATION VALVE (AWSS9)
0	EE-GK-010	INTERCONNECTION DIAGRAM - EXIT FLUME DS BYPASS ISOLATION GATE (IG10)
0	EE-GK-011	INTERCONNECTION DIAGRAM - P&W ENTRANCE OVERSHOT WEIR GATE (OWG11)
0	EE-GK-012	INTERCONNECTION DIAGRAM - P&W ENTRANCE ISOLATION GATE (IG12)
0	EE-GK-013	INTERCONNECTION DIAGRAM - P&W EXIT OVERSHOT WEIR GATE (OWG13)
0	EE-GK-014	INTERCONNECTION DIAGRAM - DS BYPASS KNIFE GATE VALVE (DSG14)
0	EE-GK-015	INTERCONNECTION DIAGRAM - DS BYPASS KNIFE GATE VALVE (DSG15)
0	EE-GK-016	INTERCONNECTION DIAGRAM - DS BYPASS ISOLATION GATE (DSG16)
0	EE-GK-017	INTERCONNECTION DIAGRAM - P&W EXIT ISOLATION GATE (IG17)
0	EE-GK-018	INTERCONNECTION DIAGRAM - TRAP GATE (TG18)
0	EE-GK-019	INTERCONNECTION DIAGRAM - TRAP GATE (TG19)

DRAWING DISCIPLINE:
- AR = ARCHITECTURAL
- CV = CIVIL
- EE = ELECTRICAL
- EV = ENVIRONMENTAL
- ME = MECHANICAL
- ST = STRUCTURAL

DRAWING CATEGORY:
- A = GENERAL DRAWINGS
- B = OVERVIEW DIAGRAMS
- C = LAYOUT DRAWINGS
- D = SCHEMATIC DIAGRAMS
- E = WIRING DIAGRAMS
- F = FABRICATION DRAWINGS
- G = INTERCONNECTION DIAGRAMS
- H = CONTROLS/INSTRUMENTATION
- J = FUTURE
- K = FUTURE

EE - AA - 001 SH1

DISCIPLINE; DRAWING CATEGORY; DRAWING SUB CATEGORY; SEQUENCE DRAWING NUMBER; USED IF SHEETS NEED TO BE INSERTED

DRAWING NUMBER LEGEND

REVISION

REV	DATE	DR	CK	AP	DESCRIPTION
0	03/28/2025	SAM	CMM	CMH	ISSUED FOR CONSTRUCTION

ELECTRICAL CONSULTANTS, INC.

"Engineering with Distinction"

THIS DRAWING IS THE PROPERTY OF ELECTRICAL CONSULTANTS, INC. AND IS TO BE USED ONLY FOR THE SPECIFIC PROJECT IDENTIFIED ON THE DRAWING. NO REVISIONS SHALL BE MADE WITHOUT THE EXPRESSED WRITTEN CONSENT OF ELECTRICAL CONSULTANTS, INC.

DRAWN BY: SAM	DATE: 02/22/2024	WOODLAND PULP, LLC WOODLAND FISH LIFT PASSAGE
CHECKED BY: CMM	DATE: 02/22/2024	DRAWING LIST - SHEET 2 FISH LIFT PASSAGE
APPROVED BY: CMH	DATE: 02/22/2024	TECHNOLOGY: HYDRO / DRAWING CATEGORY: GENERAL
SCALE: NONE	PROJECT NO.: ARL-007	DWG: EE-AB-002 / REV: 0

BILL OF MATERIALS

ITEM	FLCP	LHCS	UHCS	TOTAL	MFG	PART NUMBER	DESCRIPTION
00	3	1	1	5	N/A	N/A	NAMEPLATE - SEE DETAIL 1
01	1			1	HOFFMAN	A727212ULPG	NEMA 12 ENCLOSURE, FLOOR MOUNT, GRAY, 72"H x 72"W x 12"D
02	1			1	HOFFMAN	A72P72G	BACK PANEL, CONDUCTIVE, 11 GAUGE, 68"H x 68"W
03		1	1	2	HOFFMAN	CSD12126SS6	ENCLOSURE, WALL MOUNT, 12" x 12" x 6"
04		1	1	2	HOFFMAN	CP1212G	BACK PANEL - CONDUCTIVE
05							
06	1			1	HOFFMAN	HF05 16414	IP54 SIDE-MOUNT FILTER FAN, 6"x6", 90-265 VAC, LIGHT GRAY
07	2			2	HOFFMAN	HG05 00404	IP54 SIDE-MOUNT FILTER GRILL, 6"X6", LIGHT GREY
08	2			2	HOFFMAN	89134424R	REPLACEMENT FILTER
09	1			1	HOFFMAN	THERM16F	THERMOSTAT CONTROLLER, 115V, FAHRENHEIT
10							
11	2			2	HOFFMAN	LEDA1S35	PANELITE LED ENCLOSURE LIGHT, 13", 120VAC
12	1			1	HOFFMAN	ALFSWD	DOOR SWITCH, INCLUDE CABLING AND ALL REQUIRED HARDWARE
13							
14							
15	1			1	BRADY	101951	LABEL, DANGER! ARC FLASH AND SHOCK HAZARD, RD&BK ON WH
16	1			1	BRADY	152349	LABEL, 120 VOLTS, BLACK ON ORANGE
17							
18							
19	10			10	PANDUIT	F3X4LG6 W/C3LG6	WIREWAY, 3"W x 4"D, 6' LONG, LIGHT GRAY, WITH COVER
20	4	10"	10"	4	WEIDMULLER	187909-0000	DIN RAIL, SLOTTED, 35MM x 7.5MM, 2M LONG
21	10	20	20	50	WEIDMULLER	102230-0000	TERMINAL BLOCK, THROUGH, 2-TIER, 1 CKT, 22-12 AWG
22	154			154	WEIDMULLER	102150-0000	TERMINAL BLOCK, THROUGH, 2-TIER, 2 CKT, 22-12 AWG
23	10	1	1	12	WEIDMULLER	105910-0000	TERMINAL BLOCK END PLATE, BEIGE, FOR ITEM 21 & 22 TB'S
24	20	2	2	24	WEIDMULLER	106120-0000	TERMINAL BLOCK END BRACKET, SCREW TYPE, 8MM WIDE
25	4			4	WEIDMULLER	105366-0000	SCREWABLE CROSS-CONNECTOR, 2 POLE, 5.1 PITCH
26	13			13	WEIDMULLER	105446-0000	SCREWABLE CROSS-CONNECTOR, 10 POLE, 5.1 PITCH
27	20			20	WEIDMULLER	104192-0000	TERMINAL BLOCK, THROUGH, 2-TIER, 1 CKT, PE, 26-10 AWG
28	1			1	WEIDMULLER	108400-0000	TERMINAL BLOCK END PLATE, BEIGE, FOR ITEM 27 TB'S
29	60			60	WEIDMULLER	111984-0000	TERMINAL BLOCK, FUSED, WITH 24V BLOWN FUSE INDICATOR
30	3			3	WEIDMULLER	105000-0000	TERMINAL BLOCK END PLATE, BEIGE, FOR ITEM 29 TB'S
31	32			32	WEIDMULLER	151830-0000	TERMINAL BLOCK, FUSED/THROUGH/PE, 2-TIER, 22-12 AWG
32	2			2	WEIDMULLER	953247-0000	TERMINAL BLOCK END PLATE, BEIGE, FOR ITEM 31 TB'S
33	2			2	WEIDMULLER	126907-0000	TERMINAL BLOCK END BRACKET/FUSE CARRIER, SCREWLESS
34	2			2	WEIDMULLER	101050-0000	TERMINAL BLOCK, THROUGH/PE, 1 CKT, 12-2 AWG
35	16			16	WEIDMULLER	178379-0000	TERMINAL BLOCK, THROUGH/THROUGH/PE, 3-TIER, 22-12 AWG
36	2			2	WEIDMULLER	178380-0000	TERMINAL BLOCK END PLATE, BEIGE, FOR ITEM 35 TB'S
37	3			3	WEIDMULLER	038356-0000	TERMINAL BLOCK END BRACKET, SCREW TYPE, 8MM WIDE
38	8			8	WEIDMULLER	131250-0000	SCREWABLE CROSS-CONNECTOR, 2 POLE, 6.2 PITCH
39							
40	12			12	EATON/BUSSMANN	GMA-4-R	FUSE, GLASS TUBE, 4A FAST-ACTING, 5x20mm
41	48			48	EATON/BUSSMANN	GMA-2-R	FUSE, GLASS TUBE, 2A FAST-ACTING, 5x20mm
42	44			44	EATON/BUSSMANN	GMA-100-R	FUSE, GLASS TUBE, 100mA FAST-ACTING, 5x20mm
43							
44	1			1	ALLEN-BRADLEY	1489-M1C300	CIRCUIT BREAKER, 30A, 1 POLE, 277VAC, 48VDC RATED
45	1			1	ALLEN-BRADLEY	1489-M1C200	CIRCUIT BREAKER, 20A, 1 POLE, 277VAC, 48VDC RATED
46	7			7	ALLEN-BRADLEY	1489-M1C100	CIRCUIT BREAKER, 10A, 1 POLE, 277VAC, 48VDC RATED
47	1			1	ALLEN-BRADLEY	1489-M2C200	CIRCUIT BREAKER, 20A, 2 POLE, 277/480VAC, 96VDC RATED
48	14			14	ALLEN-BRADLEY	1489-M2C100	CIRCUIT BREAKER, 10A, 2 POLE, 277/480VAC, 96VDC RATED
49							

BILL OF MATERIALS

	ITEM	FLCP	LHCS	UHCS	TOTAL	MFG	PART NUMBER	DESCRIPTION
	50	2			2	ALLEN-BRADLEY	1756-A10K	CONTROLLOGIX CHASSIS, 10 SLOT, CONFORMALLY COATED (CC)
	51	2			2	ALLEN-BRADLEY	1756-PB75K	24VDC POWER SUPPLY, 75W, 2.8A, CC
	52	1			1	ALLEN-BRADLEY	1756-L73K	CONTROLLOGIX 5570 CONTROLLER, 8MB USER MEMORY, CC
	53	3			3	ALLEN-BRADLEY	1756-EN4TRK	ETHERNET/IP BRIDGE, DUAL PORT, CC
	54	2			2	ALLEN-BRADLEY	1756-IF16HK	ANALOG INPUT MODULE, CURRENT/VOLTAGE, 16CH, HART PROTOCOL, CC
	55	2			2	ALLEN-BRADLEY	1756-OF8HK	ANALOG OUTPUT MODULE, CURRENT/VOLTAGE, 8CH, HART PROTOCOL, CC
	56	4			4	ALLEN-BRADLEY	1756-OW16IK	CONTACT OUTPUT MODULE, RELAY OUTPUT, 16 POINT, 2A, CC
	57	6			6	ALLEN-BRADLEY	1756-IB16K	DIGITAL INPUT MODULE, 24VDC INPUT, 16 POINT, CC
	58	1			1	ALLEN-BRADLEY	1756-HSCK	HIGH-SPEED COUNTER MODULE, CC
	59	1			1	ALLEN-BRADLEY	1756-N2	SLOT FILLER MODULE
	60	8			8	ALLEN-BRADLEY	1756-JMPR	JUMPER BAR, 16 POINT, USED WITH ITEM 56
	61	7			7	ALLEN-BRADLEY	1756-TBCH	REMOVABLE TERMINAL BLOCK, 36 PIN CAGE CLAMP
	62	8			8	ALLEN-BRADLEY	1756-TBNH	REMOVABLE TERMINAL BLOCK, 20 POSITION SCREW CLAMP
	63							
	64							
	65	1			1	SOLA	SDN 10-24-100P	24VDC POWER SUPPLY, 10A, 240W
	66	8			8	PEPPERL & FUCHS	K-LB-1.30G	SURGE PROTECTOR (PANEL MOUNTED)
2	67	8			8	PEPPERL & FUCHS	K-LB-1.30	SURGE PROTECTOR (FIELD MOUNTED)
	68	1			1	PANDUIT	CDPP8RG-S	COPPER PATCH PANEL, 8 PORT, SHIELDED, DIN RAIL MOUNTED
	69	8			8	PANDUIT	CJS6X88TGY	RJ45 CAT6 TG JACK MODULE, SHIELDED
	70	1			1	AETEK	SD-404	MODULAR PoE SURGE PROTECTOR, DIN RAIL MOUNTED
	71	1			1	N-TRON	110FX2-ST	ETHERNET NETWORK SWITCH, 8CU/2FIBER PORTS, UNMANAGED
	72	1			1	ALLEN-BRADLEY	2711P-T15C22D9PK	GRAPHIC HMI, 15" XGA, WITH ETHERNET, CC
	73	1			1	HUBBELL	PR205E	CONVENIENCE OUTLET AND CAT5e PORT, GFCI, 20A, 125VAC
	74							
1	75	1	1	1	4*	ALLEN-BRADLEY	800TC-FX6A5	EMERGENCY STOP, MUSHROOM HEAD, RED - 2-NCLB CONTACTS
	76	1	1	1	3	ALLEN-BRADLEY	800TC-J20B	3 POSITION RETURN-TO-CENTER SELECTOR SWITCH, UP/DOWN
	77	2			2	ALLEN-BRADLEY	800TC-H17A	2 POSITION MAINTAINED SELECTOR SWITCH, MAN/AUTO
	78	2	2	2	6	ALLEN-BRADLEY	800TC-A2A	MOMENTARY PUSHBUTTON, FLUSH HEAD, BLACK, VARIES
	79							
	80							
	81	3			3	ALLEN-BRADLEY	800TC-QH2R	LED INDICATOR LIGHT - RED
	82	2			2	ALLEN-BRADLEY	800TC-QH2G	LED INDICATOR LIGHT - GREEN
	83	3			3	ALLEN-BRADLEY	800TC-QH2A	LED INDICATOR LIGHT - AMBER
1	84	1	1	1	4*	ALLEN-BRADLEY	800T-NGCY	DIE CAST ALUMINUM GUARD, FOR ITEM 75 EMERGENCY STOP
	85	1	1	1	4*	ALLEN-BRADLEY	800T-X646EM	EMERGENCY STOP IEC RING, ROUND, YELLOW
	86	1	1	1	3	ALLEN-BRADLEY	800T-X557	STANDARD LEGEND PLATE, UP/DOWN
	87	2			2	ALLEN-BRADLEY	800T-X559E	STANDARD LEGEND PLATE, MAN/AUTO (CUSTOM TEXT)
	88	1			1	ALLEN-BRADLEY	800T-X530	STANDARD LEGEND PLATE, ON
	89	1	1	1	3	ALLEN-BRADLEY	800T-X547	STANDARD LEGEND PLATE, START
	90	1	1	1	3	ALLEN-BRADLEY	800T-X550	STANDARD LEGEND PLATE, STOP (RED)
	91	1			1	ALLEN-BRADLEY	800T-X531	STANDARD LEGEND PLATE, OPEN
	92	1			1	ALLEN-BRADLEY	800T-X559E	STANDARD LEGEND PLATE, CLOSED (CUSTOM TEXT)
	93	2			2	ALLEN-BRADLEY	800T-X559E	STANDARD LEGEND PLATE, READY (CUSTOM TEXT)
	94	1			1	ALLEN-BRADLEY	800T-X559E	STANDARD LEGEND PLATE, FAULT (CUSTOM TEXT)
	95	1			1	ALLEN-BRADLEY	800T-X559E	STANDARD LEGEND PLATE, FULL UP (CUSTOM TEXT)
	96	1			1	ALLEN-BRADLEY	800T-X559E	STANDARD LEGEND PLATE, FULL DOWN (CUSTOM TEXT)
	97							
	98	16			16	ALLEN-BRADLEY	700-HN153 W/HN158	SCREW TERMINAL SOCKET, DIN RAIL MOUNT, W/RETAINER CLIP
	99	16			16	ALLEN-BRADLEY	700-HB32Z24-3-4	CONTROL RELAY, 15A DPDT (2 FORM C) CONTACT, 24VDC COIL
	100	1			1	ALLEN-BRADLEY	400-S13R2	E-STOP SAFETY RELAY, 3 RELAY OUTPUTS, 24VDC COIL
	101	5			5	ALLEN-BRADLEY	400-EM4R2	SAFETY RELAY EXPANSION MODULE, 4 RELAY OUTPUTS, 24VDC COIL
	102							
	103							
	104	1			1	SOLA	SDU 850	UNINTERRUPTIBLE POWER SUPPLY (UPS), 850VA, 120V, 60HZ
	105	1			1	SOLA	RELAYCARD-SDU	DRY CONTACT RELAY KIT WITH DB9 AND POWER CABLES
	106	3			3	FS	66799 / C6ASFTPSGPVC	PREMADE CAT6 CABLE, 26AWG, BLUE, 1' LONG
	107	3			3	FS	70667 / C6ASFTPSGPVC	PREMADE CAT6 CABLE, 26AWG, BLUE, 6' LONG
	108	2			2	FS	69077 / C6ASFTPSGPVC	PREMADE CAT6 CABLE, 26AWG, BLUE, 10' LONG
	109	1			1	FS	74328 / SMSTDX	PREMADE FO CABLE, ST-UPC/ST-UPC, MM, DUPLEX OS2, 50' LONG

NAMEPLATE SPECIFICATIONS:

1. NAMEPLATES SHALL HAVE 1/4" LETTERING AND THEY SHALL HAVE WHITE LETTERING ON A BLACK BACKGROUND, WITH A CHAMFERED WHITE BORDER.
2. NAMEPLATES SHALL BE SELF-ADHESIVE VINYL BRADY-STYLE LABELS.
3. THREE LINE NAMEPLATES SHALL BE 3"W x 1.5"H AND SHALL BE CONSIDERED TO BE THE STANDARD FOR THIS PROJECT.
4. FOUR LINE NAMEPLATES WILL BE LARGER, UP TO 4.5"W x 1.75"H, AS REQUIRED.

NAMEPLATE DETAIL 1
SCALE: NONE

00 FLCP
FISH LIFT
CONTROL PANEL

KEYED NOTES:

1. THERE IS A FOURTH E-STOP PUSHBUTTON (ES4), LOCATED IN THE FISH LADDER VIEWING BUILDING. SEE EE-CA-007.
2. THE FIELD MOUNTED SURGE PROTECTORS (ITEM 67) ARE NOT LOCATED IN THE FLCP. THEY ARE LISTED HERE JUST FOR ITEM COUNT.

REVISION

REV	DATE	DR	CK	AP	DESCRIPTION
0	03/28/2025	SAM	CMM	CMH	ISSUED FOR CONSTRUCTION

ECI "Engineering with Distinction"
ELECTRICAL CONSULTANTS, INC.

THIS DRAWING IS THE PROPERTY OF ELECTRICAL CONSULTANTS, INC. AND IS TO BE USED ONLY FOR THE SPECIFIC PROJECT IDENTIFIED ON THE DRAWING. NO REVISIONS SHALL BE MADE WITHOUT THE EXPRESSED WRITTEN CONSENT OF ELECTRICAL CONSULTANTS, INC.

DRAWN BY: SAM	DATE: 02/22/2024	WOODLAND PULP, LLC WOODLAND FISH LIFT PASSAGE	
CHECKED BY: CMM	DATE: 02/22/2024	BILL OF MATERIALS FISH LIFT PASSAGE	
APPROVED BY: CMH	DATE: 02/22/2024	TECHNOLOGY: HYDRO	DRAWING CATEGORY: GENERAL
SCALE: NONE	PROJECT NO.: ARL-007	DWG: EE-AC-001	REV: 0

GENERAL SYMBOLS:

- 1 — KEYED NOTE
- LCU1 — EQUIPMENT ID OR LOCATION TAG
- 21 — BOM IDENTIFIER
- D — EQUIPMENT LOCATED IN DOOR

ONE-LINE DIAGRAM SYMBOLS:

- CIRCUIT BREAKER
- MOTOR OVERLOAD
- CONTACTOR
- CURRENT TRANSFORMER (CT)
- POTENTIAL TRANSFORMER (PT)
- FUSE
- kW HP — MOTOR LOAD
- kW — NON-MOTOR LOAD

THREE-LINE DIAGRAM SYMBOLS:

- 2-POLE CIRCUIT BREAKER
- 3-POLE CIRCUIT BREAKER
- 3-POLE CIRCUIT BREAKER WITH STATUS CONTACT
- 3-POLE MOTOR OVERLOAD
- 3-POLE CONTACTOR
- TRANSFORMER
- 3-POLE MAIN FUSE DISCONNECT BLOCK
- 3-POLE DISCONNECT SWITCH

WIRING DIAGRAM SYMBOLS:

DOUBLE DECK TB'S

- 7-A, 7-B, 8-A, 8-B — HORIZONTAL JUMPER - CONNECT ADJACENT TERMINALS
- VERTICAL JUMPER - CONNECT DOUBLE STACKED TERMINALS
- WIRE JUMPER - CONNECT TERMINALS USING A PHYSICAL PIECE OF WIRE
- WHIP JUMPER - CONNECT TERMINALS USING A WHIP STYLE JUMPER IN JUMPER PORTS

TERMINAL A - TOP
TERMINAL B - BOTTOM

TRIPLE DECK TB'S

- 7-A, 7-B, 7-C, 8-A, 8-B, 8-C — HORIZONTAL JUMPER - CONNECT ADJACENT TERMINALS
- VERTICAL JUMPER - CONNECT TRIPLE STACKED TERMINALS
- WIRE JUMPER - CONNECT TERMINALS USING A PHYSICAL PIECE OF WIRE
- WHIP JUMPER - CONNECT TERMINALS USING A WHIP STYLE JUMPER IN JUMPER PORTS

TERMINAL A - TOP
TERMINAL B - MIDDLE
TERMINAL C - BOTTOM

COMMON NODE TB'S

- A C 27 B D, A C 28 B D — HORIZONTAL JUMPER - CONNECT ADJACENT TERMINALS

TERMINAL A - LEFT TOP
TERMINAL B - RIGHT TOP
TERMINAL C - LEFT BOTTOM
TERMINAL D - RIGHT BOTTOM

SCHEMATIC DIAGRAM SYMBOLS:

- RESISTOR
- CAPACITOR
- BATTERY
- DIODE
- DIODE BRIDGE
- FUSE
- FUSE LINK
- HEATER ELEMENT
- QUICK DISCONNECT DEVICE
- NORMALLY CLOSED (NC) CONTACT
- NORMALLY OPEN (NO) CONTACT
- R — RELAY COIL
- FLOW SWITCH (FS)
- LEVEL SWITCH (LS)
- PRESSURE SWITCH (PS)
- TEMPERATURE SWITCH (TS)
- VIBRATION SWITCH (VS)

CABLE IDENTIFICATION:

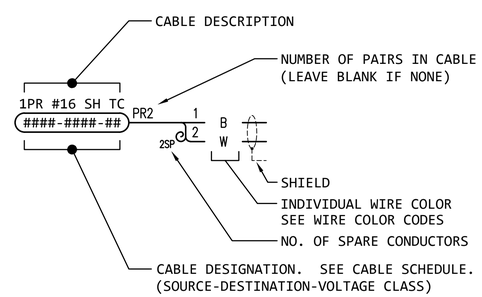

TERMINAL BLOCK SYMBOLS:

- FLCP - FISH LIFT CONTROL PANEL
- PLC - PLC MODULE
- GATE ACTUATOR OR CONTROLLER (FIELD)
- GATE ACTUATOR OR CONTROLLER (INTERNAL)
- VALVE ACTUATOR OR CONTROLLER
- MOTOR STARTER (LOCATED IN MCC)
- VF DRIVE (LOCATED IN MCC)
- UPPER/LOWER HOIST CONTROL STATION
- SKID OR MISC. CONTROL STATION
- DEVICE TERMINAL
- GROUND TERMINAL

WIRING & CABLE LEGEND:

- FIBER OPTIC CABLE
- CAT6 CABLE
- LOCAL WIRING
- FIELD WIRING
- PLUG IN JUMPER

WIRE LABELS:

1. SHALL BE HEAT SHRINK TYPE.
2. SHALL BE THE SAME ON EACH END OF A SINGLE CONDUCTOR OR CABLE
3. SHALL CONSIST OF TWO LINES:

   LINE 1:

   SHALL BE THE SOURCE EQUIPMENT NUMBER AND TERMINAL POINT FOLLOWED BY A SPACE AND A FORWARD SLASH CHARACTER.

   LINE 2:

   SHALL BE THE DESTINATION EQUIPMENT NUMBER AND TERMINAL POINT OR THE DESTINATION DEVICE TAG AND TERMINAL POINT, AS APPROPRIATE.

   EXAMPLE:

   FLCP LC-1 /
   IG1 TB-5

GENERAL ABBREVIATIONS:

AC	ALTERNATING CURRENT
BOF	BOTTOM OF FIXTURE
BOT	BOTTOM OF (CABLE) TRAY
CB	CIRCUIT BREAKER
CC	CONFORMALLY COATED
CPU	CENTRAL PROCESSING UNIT
CT	CURRENT TRANSFORMER
DC	DIRECT CURRENT
DCS	DIGITAL CONTROL SYSTEM
EST	ESTIMATE / ESTIMATED
HMI	HUMAN MACHINE INTERFACE
NF	NON-FUSED (DISCONNECT)
OIT	OPERATOR INTERFACE TERMINAL
PLC	PROGRAMMABLE LOGIC CONTROLLER
PS	POWER SUPPLY
PT	POTENTIAL TRANSFORMER
STD	STANDARD
SH	SHIELD
SP	SPARE
TC	TRAY CABLE
T/C	THERMOCOUPLE
PR	PAIR (2 CONDUCTOR)
TR	TRIAD (3 CONDUCTOR)
QD	QUAD (4 CONDUCTOR)
3C	THREE CONDUCTOR CABLE
3-1C	THREE - ONE CONDUCTOR CABLES
EMT	ELECTRICAL METALLIC TUBING
RGS	RIGID GALVANIZED STEEL
FR	FIELD RUN
FWE	FURNISHED WITH EQUIPMENT
VSC	VENDOR SUPPLIED CABLE
L OR L1	LINE (HOT)
N	NEUTRAL
GND	GROUND
XFMR	TRANSFORMER

PROJECT ABBREVIATIONS:

AWS	ATTRACTION WATER SUPPLY
US	UPSTREAM
DS	DOWNSTREAM
P&W	POOL AND WEIR (FISH LADDER)
TOB	TOP OF BEAM
TOC	TOP OF CONCRETE
TOG	TOP OF GRATE
TOS	TOP OF STEEL
TOW	TOP OF WALL

WIRE COLOR CODES:

(ONE LETTER CODE, IF USED)

B	BLACK	W	WHITE
R	RED	G	GREEN
U	BLUE	P	PINK
O	ORANGE		
Y	YELLOW		
N	BROWN		
R/B	RED WITH BLACK TRACER		
U/B	BLUE WITH BLACK TRACER		
O/B	ORANGE WITH BLACK TRACER		
Y/B	YELLOW WITH BLACK TRACER		
N/B	BROWN WITH BLACK TRACER		

WIRE COLOR CODES:

(TWO LETTER CODE, IF USED)

BK	BLACK	WH	WHITE
RD	RED	GN	GREEN
BU	BLUE	GY	GRAY
OR	ORANGE	PK	PINK
YL	YELLOW	PU	PURPLE
BN	BROWN		

STANDARD SYMBOLS AND ABBREVIATIONS:

FOR STANDARD WIRING DIAGRAM AND SCHEMATIC DRAWING ELECTRICAL SYMBOLS THAT ARE USED BUT NOT SHOWN ON THIS LEGEND, REFER TO ANSI/IEEE STD 315-1975 - STANDARD FOR GRAPHIC SYMBOLS FOR ELECTRICAL AND ELECTRONICS DIAGRAMS.

FOR PROTECTIVE DEVICE NUMBERING, REFER TO ANSI/IEEE C37.2-ELECTRICAL POWER SYSTEMS DEVICE FUNCTION NUMBERS, ACRONYMS AND CONTACT DESIGNATIONS.

REVISION

REV	DATE	DR	CK	AP	DESCRIPTION
0	03/28/2025	SAM	CMM	CMH	ISSUED FOR CONSTRUCTION

"Engineering with Distinction"
ELECTRICAL CONSULTANTS, INC.

THIS DRAWING IS THE PROPERTY OF ELECTRICAL CONSULTANTS, INC. AND IS TO BE USED ONLY FOR THE SPECIFIC PROJECT IDENTIFIED ON THE DRAWING. NO REVISIONS SHALL BE MADE WITHOUT THE EXPRESSED WRITTEN CONSENT OF ELECTRICAL CONSULTANTS, INC.

DRAWN BY: SAM	DATE: 02/22/2024	WOODLAND PULP, LLC WOODLAND FISH LIFT PASSAGE	
CHECKED BY: CMM	DATE: 02/22/2024	SYMBOL LEGEND AND NOTES FISH LIFT PASSAGE	
APPROVED BY: CMH	DATE: 02/22/2024	TECHNOLOGY: HYDRO	DRAWING CATEGORY: GENERAL
SCALE: NONE	PROJECT NO.: ARL-007	DWG: EE-AD-001	REV: 0

RACEWAY AND CABLE SCHEDULE - POWER CABLES

LINE	REV	CABLE No. SOURCE-DESTINATION-TYPE	CABLE TYPE	SOURCE DRAWING	SOURCE EQUIP. No.	SOURCE DESCRIPTION	VIA RACEWAY	DESTINATION DRAWING	DESTINATION EQUIP. No.	DESTINATION DESCRIPTION	VOLTAGE	LENGTH	COMMENTS
						FISH LIFT SERVICE							
1	A	C172 - MTS1 - P	(2) SETS OF: 3C #4/0 W/GND	EE-BA-001	C172	ER37 BREAKER C-17-2	TBD, TRAY, 2-3" RGS	EE-BA-001	MTS1	MANUAL TRANSFER SWITCH No.1	480VAC		PRIMARY MILL SOURCE
2	A	B86 - MTS1 - P	(2) SETS OF: 3C #4/0 W/GND	EE-BA-001	B86	BUS B MCC BUCKET B8-6	TBD, TRAY, 2-3" RGS	EE-BA-001	MTS1	MANUAL TRANSFER SWITCH No.1	480VAC		ALTERNATE MILL SOURCE
3	A	MTS1 - MTS2 - P	(2) SETS OF: 3C #4/0 W/GND	EE-BA-001	MTS1	MANUAL TRANSFER SWITCH No.1	2-3" RGS	EE-BA-001	MTS2	MANUAL TRANSFER SWITCH No.2	480VAC		
4	A	EGREC - EGDS - P	(2) SETS OF: 3C #4/0 W/GND	EE-BA-001	EGREC	EMERGENCY GENERATOR RECEPTACLE	2-3" RGS	EE-BA-001	EGDS	EMERGENCY GENERATOR DISCONNECT SWITCH	480VAC		EMERGENCY/BACKUP SOURCE
5	A	EGDS - MTS2 - P	(2) SETS OF: 3C #4/0 W/GND	EE-BA-001	EGDS	EMERGENCY GENERATOR DISC. SWITCH	2-3" RGS	EE-BA-001	MTS2	MANUAL TRANSFER SWITCH No.2	480VAC		
6	A	MTS2 - FLMCC - P	(2) SETS OF: 3C #4/0 W/GND	EE-BA-001	MTS2	MANUAL TRANSFER SWITCH No.2	2-3" RGS	EE-BA-001	FLMCC	FISH LIFT MOTOR CONTROL CENTER	480VAC		
7	A												
8	A												
9	A												
10	A												
						FISH LIFT MOTOR CONTROL CENTER (FLMCC)							
11	A	FLMCC - IG1 - P	3C #10 W/GND	EE-BA-001	FLMCC	FISH LIFT MOTOR CONTROL CENTER	4" RGS, TRAY, RGS FR	EE-GK-001	IG1	FISH LIFT ENTRANCE ISOLATION GATE	480VAC		
12	A	FLMCC - EG2 - P	3C #12 W/GND	EE-BA-001	FLMCC	FISH LIFT MOTOR CONTROL CENTER	4" RGS, TRAY, RGS FR	EE-GK-002	EG2	FISH LIFT ENTRANCE GATE	480VAC		
13	A	FLMCC - VG3A - P	3C #12 W/GND	EE-BA-001	FLMCC	FISH LIFT MOTOR CONTROL CENTER	4" RGS, TRAY, RGS FR	EE-GK-003 SH1	VG3A	V-GATE A	480VAC		
14	A	FLMCC - VG3B - P	3C #12 W/GND	EE-BA-001	FLMCC	FISH LIFT MOTOR CONTROL CENTER	4" RGS, TRAY, RGS FR	EE-GK-003 SH2	VG3B	V-GATE B	480VAC		
15	A	FLMCC - HH4CP - P	3C #2 W/GND	EE-BA-001	FLMCC	FISH LIFT MOTOR CONTROL CENTER	4" RGS, TRAY, RGS FR	EE-GK-004	HH4CP	HOPPER HOIST CONTROL PANEL	480VAC		
16	A	HH4CP - HH4 - P	3C #2 W/GND W/SHLD	EE-BA-001	HH4CP	FISH LIFT MOTOR CONTROL CENTER	RGS FR	EE-GK-004	HH4	HOPPER HOIST	480VAC		VFD CABLE
17	A	FLMCC - IG6 - P	3C #12 W/GND	EE-BA-001	FLMCC	FISH LIFT MOTOR CONTROL CENTER	4" RGS, TRAY, RGS FR	EE-GK-006	IG6	EXIT FLUME ISOLATION GATE	480VAC		
18	A	FLMCC - AWSS7 - P	3C #12 W/GND	EE-BA-001	FLMCC	FISH LIFT MOTOR CONTROL CENTER	4" RGS, TRAY, RGS FR	EE-GK-007	AWSS7	AWS US ISOLATION VALVE	480VAC		
19	A	FLMCC - AWSS8 - P	3C #12 W/GND	EE-BA-001	FLMCC	FISH LIFT MOTOR CONTROL CENTER	4" RGS, TRAY, RGS FR	EE-GK-008	AWSS8	DS PASSAGE AWS ISOLATION VALVE	480VAC		
20	A	FLMCC - AWSS9 - P	3C #12 W/GND	EE-BA-001	FLMCC	FISH LIFT MOTOR CONTROL CENTER	4" RGS, TRAY, RGS FR	EE-GK-009	AWSS9	AWS DS ISOLATION VALVE	480VAC		
21	A	FLMCC - IG10 - P	3C #12 W/GND	EE-BA-001	FLMCC	FISH LIFT MOTOR CONTROL CENTER	4" RGS, TRAY, RGS FR	EE-GK-010	IG10	EXIT FLUME DS PASSAGE ISOLATION GATE	480VAC		
22	A	FLMCC - OWG11 - P	3C #12 W/GND	EE-BA-001	FLMCC	FISH LIFT MOTOR CONTROL CENTER	4" RGS, TRAY, RGS FR	EE-GK-011	OWG11	P&W ENTRANCE OVERSHOT WEIR GATE	480VAC		
23	A	FLMCC - IG12 - P	3C #12 W/GND	EE-BA-001	FLMCC	FISH LIFT MOTOR CONTROL CENTER	4" RGS, TRAY, RGS FR	EE-GK-012	IG12	P&W ENTRANCE ISOLATION GATE	480VAC		
24	A	FLMCC - OWG13 - P	3C #12 W/GND	EE-BA-001	FLMCC	FISH LIFT MOTOR CONTROL CENTER	4" RGS, TRAY, RGS FR	EE-GK-013	OWG13	P&W EXIT OVERSHOT WEIR GATE	480VAC		
25	A	FLMCC - DSG14 - P	3C #12 W/GND	EE-BA-001	FLMCC	FISH LIFT MOTOR CONTROL CENTER	4" RGS, TRAY, RGS FR	EE-GK-014	DSG14	DS BYPASS KNIFE GATE VALVE	480VAC		
26	A	FLMCC - DSG15 - P	3C #12 W/GND	EE-BA-001	FLMCC	FISH LIFT MOTOR CONTROL CENTER	4" RGS, TRAY, RGS FR	EE-GK-015	DSG15	DS BYPASS KNIFE GATE VALVE	480VAC		
27	A	FLMCC - IG16 - P	3C #12 W/GND	EE-BA-001	FLMCC	FISH LIFT MOTOR CONTROL CENTER	4" RGS, TRAY, RGS FR	EE-GK-016	IG16	DS BYPASS ISOLATION GATE	480VAC		
28	A	FLMCC - IG17 - P	3C #12 W/GND	EE-BA-001	FLMCC	FISH LIFT MOTOR CONTROL CENTER	4" RGS, TRAY, RGS FR	EE-GK-017	IG17	P&W EXIT ISOLATION GATE	480VAC		
29	A	FLMCC - TG18 - P	3C #12 W/GND	EE-BA-001	FLMCC	FISH LIFT MOTOR CONTROL CENTER	4" RGS, TRAY, RGS FR	EE-GK-018	TG18	TRAP GATE	480VAC		
30	A	FLMCC - TG19 - P	3C #12 W/GND	EE-BA-001	FLMCC	FISH LIFT MOTOR CONTROL CENTER	4" RGS, TRAY, RGS FR	EE-GK-019	TG19	TRAP GATE	480VAC		
31	A	FLMCC - JH21 - P	3C #12 W/GND	EE-BA-001	FLMCC	FISH LIFT MOTOR CONTROL CENTER	4" RGS, TRAY, RGS FR	EE-BA-001	JH21	UPSTREAM SCREEN PANEL JIB HOIST	480VAC		
32	A	FLMCC - JH22 - P	3C #12 W/GND	EE-BA-001	FLMCC	FISH LIFT MOTOR CONTROL CENTER	4" RGS, TRAY, RGS FR	EE-BA-001	JH22	STATIONARY V-GATE PANEL JIB HOIST	480VAC		
33	A												
34	A												
35	A												
36	A												
37	A												
38	A												
39	A												
40	A												
41	A	FLMCC - ABSC - P	3C #6 W/GND	EE-BA-001	FLMCC	FISH LIFT MOTOR CONTROL CENTER	4" RGS, TRAY, RGS FR	EE-BA-001	ABSC	AWS SCREEN AIR BURST SYSTEM COMPRESSOR	480VAC		
42	A	FLMCC - HVAC - P	3C #10 W/GND	EE-BA-001	FLMCC	FISH LIFT MOTOR CONTROL CENTER	4" RGS, TRAY, RGS FR	EE-BA-001	HVAC	FL CONTROL BUILDING PACKAGED HVAC UNIT	480VAC		
43	A												
44	A												
45	A												
46	A												
47	A												
48	A												
49	A	FLMCC - FLPT - P	3C #4 W/GND	EE-BA-001	FLMCC	FISH LIFT MOTOR CONTROL CENTER	4" RGS, TRAY, 2 1/2" RGS	EE-BA-001	FLPT	FISH LIFT POWER TRANSFORMER	480VAC		
50	A	FLPT - FLPP - P	4C #2/0 W/GND	EE-BA-001	FLPT	FISH LIFT POWER TRANSFORMER	2 1/2" RGS, TRAY, 2" RGS	EE-BA-002	FLPP	FISH LIFT POWER PANEL	208/120VAC		

1

GENERAL NOTES:

1. ALL 600V POWER CABLES SHALL BE TYPE MC, ALUMINUM INTERLOCKED ARMOR, BLACK IN COLOR, AND HAVE WIRE INSULATION OF XHHW/XLP, UNLESS NOTED OTHERWISE.

KEYED NOTES:

1 INDICATES POWER CABLES THAT RUN TO THE DISCONNECT SWITCH FOR THAT EQUIPMENT. SEE GK SERIES DWGS FOR MORE DETAILS.

POWER CABLE IDENTIFICATION:

-Z 115kV CLASS
-Y 35kV CLASS
-K 15kV CLASS
-H 5kV CLASS
-P 600V CLASS
-G GROUNDING SYSTEM

REVISION

REV	DATE	DR	CK	AP	DESCRIPTION
0	03/28/2025	SAM	CMM	CMH	ISSUED FOR CONSTRUCTION

ECI "Engineering with Distinction" ELECTRICAL CONSULTANTS, INC.

THIS DRAWING IS THE PROPERTY OF ELECTRICAL CONSULTANTS, INC. AND IS TO BE USED ONLY FOR THE SPECIFIC PROJECT IDENTIFIED ON THE DRAWING. NO REVISIONS SHALL BE MADE WITHOUT THE EXPRESSED WRITTEN CONSENT OF ELECTRICAL CONSULTANTS, INC.

DRAWN BY SAM	DATE 08/22/2024	WOODLAND PULP, LLC WOODLAND FISH LIFT PASSAGE
CHECKED BY CMM	DATE 08/22/2024	CABLE SCHEDULE 480VAC POWER CABLES
APPROVED BY CMH	DATE 08/22/2024	TECHNOLOGY: HYDRO / DRAWING CATEGORY: GENERAL
SCALE: NONE	PROJECT NO. ARL-007	DWG EE-AE-001 / REV 0

RACEWAY AND CABLE SCHEDULE - POWER CABLES

LINE	REV	CABLE No. SOURCE-DESTINATION-TYPE	CABLE TYPE	SOURCE DRAWING	SOURCE EQUIP. No.	SOURCE DESCRIPTION	VIA RACEWAY	DESTINATION DRAWING	DESTINATION EQUIP. No.	DESTINATION DESCRIPTION	VOLTAGE	LENGTH	COMMENTS
FISH LIFT POWER PANEL (FLPP)													
1	A	FLPP - CKT1 - P	2C #12 W/GND	EE-BA-002	FLPP	FISH LIFT POWER PANEL	3" RGS, TRAY, RGS FR	EE-CB-008	CKT1	LIGHTING - FISH LIFT CONTROL BUILDING	120VAC		INTERIOR LIGHTING
2	A	FLPP - CKT3 - P	2C #10 W/GND	EE-BA-002	FLPP	FISH LIFT POWER PANEL	3" RGS, TRAY, RGS FR	EE-CB-008	CKT3	LIGHTING - FISH LIFT AREA - GRADE LEVEL	120VAC		EXTERIOR LIGHTING
3	A	FLPP - CKT5 - P	2C #10 W/GND	EE-BA-002	FLPP	FISH LIFT POWER PANEL	3" RGS, TRAY, RGS FR	EE-CB-010	CKT5	LIGHTING - FISH LIFT TOWER	120VAC		EXTERIOR LIGHTING
4	A	FLPP - CKT7 - P	2C #10 W/GND	EE-BA-002	FLPP	FISH LIFT POWER PANEL	3" RGS, TRAY, RGS FR	EE-CB-003	CKT7	LIGHTING - EXIT FLUME	120VAC		EXTERIOR LIGHTING
5	A	FLPP - CKT9 - P	2C #10 W/GND	EE-BA-002	FLPP	FISH LIFT POWER PANEL	3" RGS, TRAY, RGS FR	EE-CB-004	CKT9	LIGHTING - FISH LADDER	120VAC		EXTERIOR LIGHTING
6	A	FLPP - CKT11 - P	2C #10 W/GND	EE-BA-002	FLPP	FISH LIFT POWER PANEL	3" RGS, TRAY, RGS FR	EE-CB-003	CKT11	LIGHTING - DOWNSTREAM FISH BYPASS	120VAC		EXTERIOR LIGHTING
7	A	FLPP - CKT13 - P	2C #12 W/GND	EE-BA-002	FLPP	FISH LIFT POWER PANEL	3" RGS, TRAY, RGS FR	EE-CB-007	CKT13	LIGHTING - FISH LADDER VIEWING BUILDING	120VAC		INTERIOR LIGHTING
8	A	FLPP - CKT15 - P		EE-BA-002	FLPP	FISH LIFT POWER PANEL			CKT15				SPARE
9	A	FLPP - CKT17 - P		EE-BA-002	FLPP	FISH LIFT POWER PANEL			CKT17				SPARE
10	A	FLPP - CKT19 - P		EE-BA-002	FLPP	FISH LIFT POWER PANEL			CKT19				SPARE
11	A	FLPP - CKT21 - P		EE-BA-002	FLPP	FISH LIFT POWER PANEL			CKT21				SPARE
12	A	FLPP - ABSCP - P	2C #12 W/GND	EE-BA-002	FLPP	FISH LIFT POWER PANEL	3" RGS, TRAY, 2" RGS		ABSCP	AIR BURST SYSTEM CONTROL PANEL	120VAC		
13	A	FLPP - CKT25 - P		EE-BA-002	FLPP	FISH LIFT POWER PANEL			CKT25				SPARE
14	A	FLPP - FLCP - P	2C #10 W/GND	EE-BA-002	FLPP	FISH LIFT POWER PANEL	3" RGS, TRAY, 3" RGS	EE-DC-002	FLCP	FISH LIFT CONTROL PANEL	120VAC		
15	A	FLPP-CKT29,31- P		EE-BA-002	FLPP	FISH LIFT POWER PANEL			CKT29,31				SPARE
16	A	FLPP-CKT33,35- P		EE-BA-002	FLPP	FISH LIFT POWER PANEL			CKT33,35				SPARE
17	A	FLPP - CKT37 - P		EE-BA-002	FLPP	FISH LIFT POWER PANEL			CKT37				SPACE
18	A	FLPP - CKT39 - P		EE-BA-002	FLPP	FISH LIFT POWER PANEL			CKT39				SPACE
19	A	FLPP - CKT41 - P		EE-BA-002	FLPP	FISH LIFT POWER PANEL			CKT41				SPACE
20	A												
21	A												
22	A	FLPP - CKT2 - P	2C #12 W/GND	EE-BA-002	FLPP	FISH LIFT POWER PANEL	3" RGS, TRAY, RGS FR	EE-CB-008	CKT2	RECEPTACLES - FISH LIFT CONTROL BUILDING	120VAC		INTERIOR RECEPTACLES
23	A	FLPP - CKT4 - P	2C #12 W/GND	EE-BA-002	FLPP	FISH LIFT POWER PANEL	3" RGS, TRAY, RGS FR	EE-CB-008	CKT4	RECEPTACLES - FISH LIFT CONTROL BUILDING	120VAC		INTERIOR RECEPTACLES
24	A	FLPP - CKT6 - P	2C #12 W/GND	EE-BA-002	FLPP	FISH LIFT POWER PANEL	3" RGS, TRAY, RGS FR	EE-CB-008	CKT6	RECEPTACLES - FISH LIFT CONTROL BUILDING	120VAC		EXTERIOR RECEPTACLES
25	A	FLPP - CKT8 - P	2C #12 W/GND	EE-BA-002	FLPP	FISH LIFT POWER PANEL	3" RGS, TRAY, RGS FR	EE-CB-010	CKT8	RECEPTACLES - FISH LIFT TOWER COLUMN A2	120VAC		EXTERIOR RECEPTACLES
26	A	FLPP - CKT10 - P	2C #12 W/GND	EE-BA-002	FLPP	FISH LIFT POWER PANEL	3" RGS, TRAY, RGS FR	EE-CB-010	CKT10	RECEPTACLES - FISH LIFT TOWER COLUMN B3	120VAC		EXTERIOR RECEPTACLES
27	A	FLPP - CKT12 - P	2C #12 W/GND	EE-BA-002	FLPP	FISH LIFT POWER PANEL	3" RGS, TRAY, RGS FR	EE-CB-010	CKT12	RECEPTACLES - FISH LIFT TOWER COLUMN C1	120VAC		EXTERIOR RECEPTACLES
28	A	FLPP - CKT14 - P	2C #12 W/GND	EE-BA-002	FLPP	FISH LIFT POWER PANEL	3" RGS, TRAY, RGS FR	EE-CB-010	CKT14	RECEPTACLES - FISH LIFT TOWER COLUMN E2	120VAC		EXTERIOR RECEPTACLES
29	A	FLPP - CKT16 - P	2C #12 W/GND	EE-BA-002	FLPP	FISH LIFT POWER PANEL	3" RGS, TRAY, RGS FR	EE-CB-004	CKT16	RECEPTACLES - EXIT FLUME AREA	120VAC		EXTERIOR RECEPTACLES
30	A	FLPP - CKT18 - P	2C #12 W/GND	EE-BA-002	FLPP	FISH LIFT POWER PANEL	3" RGS, TRAY, RGS FR	EE-CB-003	CKT18	RECEPTACLES - DS BYPASS AREA	120VAC		EXTERIOR RECEPTACLES
31	A	FLPP - CKT20 - P	2C #12 W/GND	EE-BA-002	FLPP	FISH LIFT POWER PANEL	3" RGS, TRAY, RGS FR	EE-CB-007	CKT20	RECEPTACLES - FISH LADDER VIEWING BLDG	120VAC		INTERIOR RECEPTACLES
32	A	FLPP - CKT22 - P	2C #12 W/GND	EE-BA-002	FLPP	FISH LIFT POWER PANEL	3" RGS, TRAY, RGS FR	EE-CB-004	CKT22	RECEPTACLES - FISH LADDER (WEST)	120VAC		EXTERIOR RECEPTACLES
33	A	FLPP - CKT24 - P	2C #12 W/GND	EE-BA-002	FLPP	FISH LIFT POWER PANEL	3" RGS, TRAY, RGS FR	EE-CB-005	CKT24	RECEPTACLES - FISH LADDER (EAST)	120VAC		EXTERIOR RECEPTACLES
34	A	FLPP - CKT26 - P	2C #12 W/GND	EE-BA-002	FLPP	FISH LIFT POWER PANEL	3" RGS, TRAY, RGS FR	EE-CB-010	CKT26	RECEPTACLES - FISH LIFT ENTR. GATE AREA	120VAC		EXTERIOR RECEPTACLES
35	A	FLPP - CKT28 - P		EE-BA-002	FLPP	FISH LIFT POWER PANEL			CKT28				SPARE
36	A	FLPP-CKT30,32- P		EE-BA-002	FLPP	FISH LIFT POWER PANEL			CKT30,32				SPARE
37	A	FLPP-CKT34,36- P		EE-BA-002	FLPP	FISH LIFT POWER PANEL			CKT34,36				SPARE
38	A	FLPP - CKT38 - P		EE-BA-002	FLPP	FISH LIFT POWER PANEL			CKT38				SPACE
39	A	FLPP - CKT40 - P		EE-BA-002	FLPP	FISH LIFT POWER PANEL			CKT40				SPACE
40	A	FLPP - CKT42 - P		EE-BA-002	FLPP	FISH LIFT POWER PANEL			CKT42				SPACE
41	A												
42	A												
43	A												
44	A												
45	A												
46	A												
47	A												
48	A												
49	A												
50	A												

1

GENERAL NOTES:

1. ALL 600V POWER CABLES SHALL BE TYPE MC, ALUMINUM INTERLOCKED ARMOR, BLACK IN COLOR, AND HAVE WIRE INSULATION OF XHHW/XLP, UNLESS NOTED OTHERWISE.

KEYED NOTES:

1. ALL HOME RUN CABLES FOR EXTERIOR LIGHTING CIRCUITS (THE CABLE BETWEEN THE POWER PANEL AND THE SWITCH) SHALL BE #10 AWG. ALL CABLES BEYOND THE SWITCH SHALL BE #12 AWG, UNLESS NOTED OTHERWISE.

POWER CABLE IDENTIFICATION:

-Z 115kV CLASS
-Y 35kV CLASS
-K 15kV CLASS
-H 5kV CLASS
-P 600V CLASS
-G GROUNDING SYSTEM

REVISION

REV	DATE	DR	CK	AP	DESCRIPTION
0	03/28/2025	SAM	CMM	CMH	ISSUED FOR CONSTRUCTION

ECI "Engineering with Distinction" ELECTRICAL CONSULTANTS, INC.

THIS DRAWING IS THE PROPERTY OF ELECTRICAL CONSULTANTS, INC. AND IS TO BE USED ONLY FOR THE SPECIFIC PROJECT IDENTIFIED ON THE DRAWING. NO REVISIONS SHALL BE MADE WITHOUT THE EXPRESSED WRITTEN CONSENT OF ELECTRICAL CONSULTANTS, INC.

DRAWN BY SAM	DATE 08/22/2024	WOODLAND PULP, LLC WOODLAND FISH LIFT PASSAGE	
CHECKED BY CMM	DATE 08/22/2024	CABLE SCHEDULE 208/120VAC POWER CABLES	
APPROVED BY CMH	DATE 08/22/2024	TECHNOLOGY HYDRO	DRAWING CATEGORY GENERAL
SCALE NONE		PROJECT NO. ARL-007	DWG EE-AE-002 / REV 0

RACEWAY AND CABLE SCHEDULE - DIGITAL CONTROL CABLES

LINE	REV	CABLE No. SOURCE-DESTINATION-TYPE	CABLE TYPE	SOURCE			VIA RACEWAY	DESTINATION			VOLTAGE	LENGTH	COMMENTS
				DRAWING	EQUIP. No.	DESCRIPTION		DRAWING	EQUIP. No.	DESCRIPTION			
FISH LIFT CONTROL PANEL (FLCP)													
1	A	FLCP - IG1 - C1	7C #14	EE-ED-009	FLCP	FISH LIFT CONTROL PANEL	4" RGS, TRAY, RGS FR	EE-GK-001	IG1	FISH LIFT ENTRANCE ISOLATION GATE	24VDC		TO RC/LS
2	A	FLCP - IG1 - C2	7C #14	EE-ED-010	FLCP	FISH LIFT CONTROL PANEL	4" RGS, TRAY, RGS FR	EE-GK-001	IG1	FISH LIFT ENTRANCE ISOLATION GATE	24VDC		TO RH
3	A	FLCP - EG2 - C1	7C #14	EE-ED-009	FLCP	FISH LIFT CONTROL PANEL	4" RGS, TRAY, RGS FR	EE-GK-002	EG2	FISH LIFT ENTRANCE GATE	24VDC		TO RF/LS
4	A	FLCP - EG2 - C2	7C #14	EE-ED-010	FLCP	FISH LIFT CONTROL PANEL	4" RGS, TRAY, RGS FR	EE-GK-002	EG2	FISH LIFT ENTRANCE GATE	24VDC		TO RH
5	A	FLCP - VG3A - C1	7C #14	EE-ED-009	FLCP	FISH LIFT CONTROL PANEL	4" RGS, TRAY, RGS FR	EE-GK-003 SH1	VG3A	V-GATE A	24VDC		TO RF/LS
6	A	FLCP - VG3A - C2	7C #14	EE-ED-010	FLCP	FISH LIFT CONTROL PANEL	4" RGS, TRAY, RGS FR	EE-GK-003 SH1	VG3A	V-GATE A	24VDC		TO RH
7	A	FLCP - VG3B - C1	7C #14	EE-ED-009	FLCP	FISH LIFT CONTROL PANEL	4" RGS, TRAY, RGS FR	EE-GK-003 SH2	VG3B	V-GATE B	24VDC		TO RF/LS
8	A	FLCP - VG3B - C2	7C #14	EE-ED-010	FLCP	FISH LIFT CONTROL PANEL	4" RGS, TRAY, RGS FR	EE-GK-003 SH2	VG3B	V-GATE B	24VDC		TO RH
9	A	FLCP - VG3JB - C	5C #14	EE-ED-010	FLCP	FISH LIFT CONTROL PANEL	4" RGS, TRAY, RGS FR	EE-DD-016	VG3JB	V-GATE LIMIT SWITCH JUNCTION BOX	24VDC		TO RH JUNCTION BOX BY CONTRACTOR
10	A	FLCP - ES4 - C	5C #14	EE-ED-007	FLCP	FISH LIFT CONTROL PANEL	4" RGS, TRAY, RGS FR		ES4	E-STOP No.4	24VDC		TO LJ/LS
11	A	FLCP - HH4CP - C1	7C #14	EE-ED-009	FLCP	FISH LIFT CONTROL PANEL	4" RGS, TRAY, RGS FR	EE-GK-004	HH4CP	HOPPER HOIST CONTROL PANEL	24VDC		TO RE/LS
12	A	FLCP - HH4CP - C2	7C #14	EE-ED-007	FLCP	FISH LIFT CONTROL PANEL	4" RGS, TRAY, RGS FR	EE-GK-004	HH4CP	HOPPER HOIST CONTROL PANEL	24VDC		TO LK
13	A	FLCP - HH4CP - C3	7C #14	EE-ED-007	FLCP	FISH LIFT CONTROL PANEL	4" RGS, TRAY, RGS FR	EE-GK-004	HH4CP	HOPPER HOIST CONTROL PANEL	24VDC		TO LK
14	A	FLCP - HH4DS - C	5C #14	EE-ED-010	FLCP	FISH LIFT CONTROL PANEL	4" RGS, TRAY, RGS FR	EE-GK-004	HH4DS	HOPPER HOIST DISCONNECT SWITCH	24VDC		TO RL
15	A	FLCP LHCS - C	12C #14	EE-ED-007	FLCP	FISH LIFT CONTROL PANEL	4" RGS, TRAY, RGS FR	EE-CE-003	LHCS	LOWER HOIST CONTROL STATION	24VDC		TO LJ
16	A	FLCP - UHCS - C	12C #14	EE-ED-007	FLCP	FISH LIFT CONTROL PANEL	4" RGS, TRAY, RGS FR	EE-CE-003	UHCS	UPPER HOIST CONTROL STATION	24VDC		TO LJ
17	A	FLCP - HG5ZS - C	5C #14	EE-ED-007	FLCP	FISH LIFT CONTROL PANEL	4" RGS, TRAY, RGS FR	EE-DD-008	HG5ZS	HOPPER GATE LIMIT SWITCH	24VDC		TO LK
18	A	FLCP - IG6 - C1	7C #14	EE-ED-009	FLCP	FISH LIFT CONTROL PANEL	4" RGS, TRAY, RGS FR	EE-GK-006	IG6	EXIT FLUME ISOLATION GATE	24VDC		TO RC/LS
19	A	FLCP - IG6 - C2	7C #14	EE-ED-010	FLCP	FISH LIFT CONTROL PANEL	4" RGS, TRAY, RGS FR	EE-GK-006	IG6	EXIT FLUME ISOLATION GATE	24VDC		TO RJ
20	A	FLCP - AWSS7 - C1	7C #14	EE-ED-009	FLCP	FISH LIFT CONTROL PANEL	4" RGS, TRAY, RGS FR	EE-GK-007	AWSS7	AWS US ISOLATION VALVE	24VDC		TO RF/LS
21	A	FLCP - AWSS7 - C2	7C #14	EE-ED-010	FLCP	FISH LIFT CONTROL PANEL	4" RGS, TRAY, RGS FR	EE-GK-007	AWSS7	AWS US ISOLATION VALVE	24VDC		TO RJ
22	A	FLCP - AWSS8 - C1	7C #14	EE-ED-009	FLCP	FISH LIFT CONTROL PANEL	4" RGS, TRAY, RGS FR	EE-GK-008	AWSS8	DS PASSAGE AWS ISOLATION VALVE	24VDC		TO RF/LS
23	A	FLCP - AWSS8 - C2	7C #14	EE-ED-010	FLCP	FISH LIFT CONTROL PANEL	4" RGS, TRAY, RGS FR	EE-GK-008	AWSS8	DS PASSAGE AWS ISOLATION VALVE	24VDC		TO RJ
24	A	FLCP - AWSS9 - C1	7C #14	EE-ED-009	FLCP	FISH LIFT CONTROL PANEL	4" RGS, TRAY, RGS FR	EE-GK-009	AWSS9	AWS DS ISOLATION VALVE	24VDC		TO RF/LS
25	A	FLCP - AWSS9 - C2	7C #14	EE-ED-010	FLCP	FISH LIFT CONTROL PANEL	4" RGS, TRAY, RGS FR	EE-GK-009	AWSS9	AWS DS ISOLATION VALVE	24VDC		TO RJ
26	A	FLCP - IG10 - C1	7C #14	EE-ED-009	FLCP	FISH LIFT CONTROL PANEL	4" RGS, TRAY, RGS FR	EE-GK-010	IG10	EXIT FLUME DS BYPASS ISOLATION GATE	24VDC		TO RC/LS
27	A	FLCP - IG10 - C2	7C #14	EE-ED-010	FLCP	FISH LIFT CONTROL PANEL	4" RGS, TRAY, RGS FR	EE-GK-010	IG10	EXIT FLUME DS BYPASS ISOLATION GATE	24VDC		TO RK
28	A	FLCP - OWG11 - C1	7C #14	EE-ED-009	FLCP	FISH LIFT CONTROL PANEL	4" RGS, TRAY, RGS FR	EE-GK-011	OWG11	P&W ENTRANCE OVERSHOT WEIR GATE	24VDC		TO RF/LS
29	A	FLCP - OWG11 - C2	7C #14	EE-ED-010	FLCP	FISH LIFT CONTROL PANEL	4" RGS, TRAY, RGS FR	EE-GK-011	OWG11	P&W ENTRANCE OVERSHOT WEIR GATE	24VDC		TO RK
30	A	FLCP - IG12 - C1	7C #14	EE-ED-009	FLCP	FISH LIFT CONTROL PANEL	4" RGS, TRAY, RGS FR	EE-GK-012	IG12	P&W ENTRANCE ISOLATION GATE	24VDC		TO RC/LS
31	A	FLCP - IG12 - C2	7C #14	EE-ED-010	FLCP	FISH LIFT CONTROL PANEL	4" RGS, TRAY, RGS FR	EE-GK-012	IG12	P&W ENTRANCE ISOLATION GATE	24VDC		TO RK
32	A	FLCP - OWG13 - C1	7C #14	EE-ED-009	FLCP	FISH LIFT CONTROL PANEL	4" RGS, TRAY, RGS FR	EE-GK-013	OWG13	P&W EXIT OVERSHOT WEIR GATE	24VDC		TO RF/LS
33	A	FLCP - OWG13 - C2	7C #14	EE-ED-010	FLCP	FISH LIFT CONTROL PANEL	4" RGS, TRAY, RGS FR	EE-GK-013	OWG13	P&W EXIT OVERSHOT WEIR GATE	24VDC		TO RK
34	A	FLCP - DSG14 - C1	7C #14	EE-ED-009	FLCP	FISH LIFT CONTROL PANEL	4" RGS, TRAY, RGS FR	EE-GK-014	DSG14	DS BYPASS KNIFE GATE VALVE	24VDC		TO RD/LS
35	A	FLCP - DSG14 - C2	7C #14	EE-ED-010	FLCP	FISH LIFT CONTROL PANEL	4" RGS, TRAY, RGS FR	EE-GK-014	DSG14	DS BYPASS KNIFE GATE VALVE	24VDC		TO RK
36	A	FLCP - DSG15 - C1	7C #14	EE-ED-009	FLCP	FISH LIFT CONTROL PANEL	4" RGS, TRAY, RGS FR	EE-GK-015	DSG15	DS BYPASS KNIFE GATE VALVE	24VDC		TO RD/LS
37	A	FLCP - DSG15 - C2	7C #14	EE-ED-010	FLCP	FISH LIFT CONTROL PANEL	4" RGS, TRAY, RGS FR	EE-GK-015	DSG15	DS BYPASS KNIFE GATE VALVE	24VDC		TO RL
38	A	FLCP - IG16 - C1	7C #14	EE-ED-009	FLCP	FISH LIFT CONTROL PANEL	4" RGS, TRAY, RGS FR	EE-GK-016	IG16	DS BYPASS ISOLATION GATE	24VDC		TO RD/LS
39	A	FLCP - IG16 - C2	7C #14	EE-ED-010	FLCP	FISH LIFT CONTROL PANEL	4" RGS, TRAY, RGS FR	EE-GK-016	IG16	DS BYPASS ISOLATION GATE	24VDC		TO RL
40	A	FLCP - IG17 - C1	7C #14	EE-ED-009	FLCP	FISH LIFT CONTROL PANEL	4" RGS, TRAY, RGS FR	EE-GK-017	IG17	P&W EXIT ISOLATION GATE	24VDC		TO RD/LS
41	A	FLCP - IG17 - C2	7C #14	EE-ED-010	FLCP	FISH LIFT CONTROL PANEL	4" RGS, TRAY, RGS FR	EE-GK-017	IG17	P&W EXIT ISOLATION GATE	24VDC		TO RL
42	A	FLCP - TG18 - C1	7C #14	EE-ED-009	FLCP	FISH LIFT CONTROL PANEL	4" RGS, TRAY, RGS FR	EE-GK-018	TG18	TRAP GATE	24VDC		TO RF/LS
43	A	FLCP - TG18 - C2	7C #14	EE-ED-010	FLCP	FISH LIFT CONTROL PANEL	4" RGS, TRAY, RGS FR	EE-GK-018	TG18	TRAP GATE	24VDC		TO RL
44	A	FLCP - TG19 - C1	7C #14	EE-ED-009	FLCP	FISH LIFT CONTROL PANEL	4" RGS, TRAY, RGS FR	EE-GK-019	TG19	TRAP GATE	24VDC		TO RF/LS
45	A	FLCP - TG19 - C2	7C #14	EE-ED-010	FLCP	FISH LIFT CONTROL PANEL	4" RGS, TRAY, RGS FR	EE-GK-019	TG19	TRAP GATE	24VDC		TO RL
46	A												
47	A												
48	A												
49	A	FLCP - ABSCP - C1	7C #14	EE-ED-009	FLCP	FISH LIFT CONTROL PANEL	4" RGS, TRAY, RGS FR	EE-DD-014	ABSCP	AIR BURST SYSTEM CONTROL PANEL	24VDC		TO RF
50	A	FLCP - ABSCP - C2	7C #14	EE-ED-010	FLCP	FISH LIFT CONTROL PANEL	4" RGS, TRAY, RGS FR	EE-DD-017	ABSCP	AIR BURST SYSTEM CONTROL PANEL	24VDC		TO RJ

CONTROL CABLE IDENTIFICATION:

-C DIGITAL CONTROL (24VDC, 125VDC & 120VAC)
-X ANALOG CONTROL (<50V, 4-20mA, RTD, ETC.)
-F FIBER OPTIC
-Z COMMUNICATION (ETHERNET, PROFIBUS, ETC.)
-CT CURRENT TRANSFORMER
-PT POTENTIAL TRANSFORMER

REVISION

REV	DATE	DR	CK	AP	DESCRIPTION
0	03/28/2025	SAM	CMM	CMH	ISSUED FOR CONSTRUCTION

ECI "Engineering with Distinction" ELECTRICAL CONSULTANTS, INC.

THIS DRAWING IS THE PROPERTY OF ELECTRICAL CONSULTANTS, INC. AND IS TO BE USED ONLY FOR THE SPECIFIC PROJECT IDENTIFIED ON THE DRAWING. NO REVISIONS SHALL BE MADE WITHOUT THE EXPRESSED WRITTEN CONSENT OF ELECTRICAL CONSULTANTS, INC.

DRAWN BY SAM	DATE 08/22/2024	WOODLAND PULP, LLC WOODLAND FISH LIFT PASSAGE	
CHECKED BY CMM	DATE 08/22/2024	CABLE SCHEDULE DIGITAL CONTROL CABLES	
APPROVED BY CMH	DATE 08/22/2024	TECHNOLOGY HYDRO	DRAWING CATEGORY GENERAL
SCALE NONE		PROJECT NO. ARL-007	DWG EE-AE-003 REV 0

RACEWAY AND CABLE SCHEDULE - ANALOG CONTROL AND COMMUNICATION CABLES

LINE	REV	CABLE No. SOURCE-DESTINATION-TYPE	CABLE TYPE	SOURCE DRAWING	SOURCE EQUIP. No.	SOURCE DESCRIPTION	VIA RACEWAY	DESTINATION DRAWING	DESTINATION EQUIP. No.	DESTINATION DESCRIPTION	VOLTAGE	LENGTH	COMMENTS
FISH LIFT CONTROL PANEL (FLCP)													
1	A	FLCP - IG1 - X	2PR #18 SHLD	EE-ED-006	FLCP	FISH LIFT CONTROL PANEL	4" RGS, TRAY, RGS FR	EE-GK-001	IG1	FISH LIFT ENTRANCE ISOLATION GATE	24VDC		TO LE
2	A	FLCP - EG2 - X	2PR #18 SHLD	EE-ED-006	FLCP	FISH LIFT CONTROL PANEL	4" RGS, TRAY, RGS FR	EE-GK-002	EG2	FISH LIFT ENTRANCE GATE	24VDC		TO LE/LG
3	A	FLCP - VG3A - X	2PR #18 SHLD	EE-ED-006	FLCP	FISH LIFT CONTROL PANEL	4" RGS, TRAY, RGS FR	EE-GK-003 SH1	VG3A	V-GATE A	24VDC		TO LE/LG
4	A	FLCP - VG3B - X	2PR #18 SHLD	EE-ED-006	FLCP	FISH LIFT CONTROL PANEL	4" RGS, TRAY, RGS FR	EE-GK-003 SH2	VG3B	V-GATE B	24VDC		TO LE/LG
5	A	FLCP - HH4CP - X	1TR #18 SHLD	EE-ED-007	FLCP	FISH LIFT CONTROL PANEL	4" RGS, TRAY, RGS FR	EE-GK-004	HH4CP	HOPPER HOIST CONTROL PANEL	24VDC		TO LL
6	A	HH4CP - ENC4 - X	6C #20 SHLD	EE-GK-004	FLCP	FISH LIFT CONTROL PANEL	4" RGS, TRAY, RGS FR	EE-GK-004	ENC4	HOPPER HOIST HIGH SPEED ENCODER	24VDC		
7	A	FLCP - IG6 - X	2PR #18 SHLD	EE-ED-006	FLCP	FISH LIFT CONTROL PANEL	4" RGS, TRAY, RGS FR	EE-GK-006	IG6	EXIT FLUME ISOLATION GATE	24VDC		TO LE
8	A	FLCP - AWSS7 - X	2PR #18 SHLD	EE-ED-006	FLCP	FISH LIFT CONTROL PANEL	4" RGS, TRAY, RGS FR	EE-GK-007	AWSS7	AWS US ISOLATION VALVE	24VDC		TO LE/LG
9	A	FLCP - AWSS8 - X	2PR #18 SHLD	EE-ED-006	FLCP	FISH LIFT CONTROL PANEL	4" RGS, TRAY, RGS FR	EE-GK-008	AWSS8	DS PASSAGE AWS ISOLATION VALVE	24VDC		TO LE/LG
10	A	FLCP - AWSS9 - X	2PR #18 SHLD	EE-ED-006	FLCP	FISH LIFT CONTROL PANEL	4" RGS, TRAY, RGS FR	EE-GK-009	AWSS9	AWS DS ISOLATION VALVE	24VDC		TO LE/LG
11	A	FLCP - IG10 - X	2PR #18 SHLD	EE-ED-006	FLCP	FISH LIFT CONTROL PANEL	4" RGS, TRAY, RGS FR	EE-GK-010	IG10	EXIT FLUME DS BYPASS ISOLATION GATE	24VDC		TO LE
12	A	FLCP - OWG11 - X	2PR #18 SHLD	EE-ED-006	FLCP	FISH LIFT CONTROL PANEL	4" RGS, TRAY, RGS FR	EE-GK-011	OWG11	P&W ENTRANCE OVERSHOT WEIR GATE	24VDC		TO LE/LG
13	A	FLCP - IG12 - X	2PR #18 SHLD	EE-ED-006	FLCP	FISH LIFT CONTROL PANEL	4" RGS, TRAY, RGS FR	EE-GK-012	IG12	P&W ENTRANCE ISOLATION GATE	24VDC		TO LE
14	A	FLCP - OWG13 - X	2PR #18 SHLD	EE-ED-006	FLCP	FISH LIFT CONTROL PANEL	4" RGS, TRAY, RGS FR	EE-GK-013	OWG13	P&W EXIT OVERSHOT WEIR GATE	24VDC		TO LE/LG
15	A	FLCP - DSG14 - X	2PR #18 SHLD	EE-ED-006	FLCP	FISH LIFT CONTROL PANEL	4" RGS, TRAY, RGS FR	EE-GK-014	DSG14	DS BYPASS KNIFE GATE VALVE	24VDC		TO LE
16	A	FLCP - DSG15 - X	2PR #18 SHLD	EE-ED-006	FLCP	FISH LIFT CONTROL PANEL	4" RGS, TRAY, RGS FR	EE-GK-015	DSG15	DS BYPASS KNIFE GATE VALVE	24VDC		TO LE
17	A	FLCP - IG16 - X	2PR #18 SHLD	EE-ED-006	FLCP	FISH LIFT CONTROL PANEL	4" RGS, TRAY, RGS FR	EE-GK-016	IG16	DS BYPASS ISOLATION GATE	24VDC		TO LF
18	A	FLCP - IG17 - X	2PR #18 SHLD	EE-ED-006	FLCP	FISH LIFT CONTROL PANEL	4" RGS, TRAY, RGS FR	EE-GK-017	IG17	P&W EXIT ISOLATION GATE	24VDC		TO LF
19	A	FLCP - TG18 - X	2PR #18 SHLD	EE-ED-006	FLCP	FISH LIFT CONTROL PANEL	4" RGS, TRAY, RGS FR	EE-GK-018	TG18	TRAP GATE	24VDC		TO LF/LH
20	A	FLCP - TG19 - X	2PR #18 SHLD	EE-ED-006	FLCP	FISH LIFT CONTROL PANEL	4" RGS, TRAY, RGS FR	EE-GK-019	TG19	TRAP GATE	24VDC		TO LF/LH
21	A												
22	A												
23	A												
24	A												
25	A												
26	A												
27	A												
28	A												
29	A												
30	A												
31	A	FLCP - WLS1 - X	1PR #18 SHLD	EE-ED-006	FLCP	FISH LIFT CONTROL PANEL	4" RGS, TRAY, RGS FR	EE-DD-004 SH2	WLS1	LIFT TAILRACE WATER LEVEL SENSOR	24VDC		TO LF
32	A	FLCP - WLS2 - X	1PR #18 SHLD	EE-ED-006	FLCP	FISH LIFT CONTROL PANEL	4" RGS, TRAY, RGS FR	EE-DD-004 SH2	WLS2	LIFT ENTRANCE CHANNEL WATER LEVEL SENSOR	24VDC		TO LF
33	A	FLCP - WLS3 - X	1PR #18 SHLD	EE-ED-006	FLCP	FISH LIFT CONTROL PANEL	4" RGS, TRAY, RGS FR	EE-DD-004 SH2	WLS3	LIFT US WEIR WATER LEVEL SENSOR	24VDC		TO LF
34	A	FLCP - WLS4 - X	1PR #18 SHLD	EE-ED-006	FLCP	FISH LIFT CONTROL PANEL	4" RGS, TRAY, RGS FR	EE-DD-004 SH2	WLS4	P&W TAIL WATER ENTRANCE WATER LS	24VDC		TO LF
35	A	FLCP - WLS5 - X	1PR #18 SHLD	EE-ED-006	FLCP	FISH LIFT CONTROL PANEL	4" RGS, TRAY, RGS FR	EE-DD-004 SH2	WLS5	P&W INSIDE ENTRANCE WATER LEVEL SENSOR	24VDC		TO LF
36	A	FLCP - WLS6 - X	1PR #18 SHLD	EE-ED-006	FLCP	FISH LIFT CONTROL PANEL	4" RGS, TRAY, RGS FR	EE-DD-004 SH2	WLS6	P&W INSIDE EXIT WATER LEVEL SENSOR	24VDC		TO LF
37	A	FLCP - WLS7 - X	1PR #18 SHLD	EE-ED-006	FLCP	FISH LIFT CONTROL PANEL	4" RGS, TRAY, RGS FR	EE-DD-004 SH2	WLS7	INSIDE EXIT FLUME ENTRANCE WATER LS	24VDC		TO LF
38	A	FLCP - WLS8 - X	1PR #18 SHLD	EE-ED-006	FLCP	FISH LIFT CONTROL PANEL	4" RGS, TRAY, RGS FR	EE-DD-004 SH2	WLS8	INSIDE EXIT FLUME WATER LEVEL SENSOR	24VDC		TO LF
39	A												
40	A												
41	A	FLCP - HH4CP - Z	CAT6	EE-BB-001	FLCP	FISH LIFT CONTROL PANEL	1" RGS	EE-GK-004	HH4CP	HOPPER HOIST CONTROL PANEL	NA		
42	A	FLCP - WMILL - Z	CAT6	EE-BB-001	FLCP	FISH LIFT CONTROL PANEL	1" RGS	EE-BB-001	TBD	REMOTE ACCESS (DETERMINED BY MILL)	NA		
43	A	FLCP - FLFPP - Z	MULTIMODE FIBER OPTIC	EE-BB-001	FLCP	FISH LIFT CONTROL PANEL	1" RGS	EE-BB-001	FLCP	FISH LIFT FIBER PATCH PANEL	NA		
44	A	FLFPP - WMILL - Z	MULTIMODE FIBER OPTIC	EE-BB-001	FLFPP	FISH LIFT FIBER PATCH PANEL	1" RGS	EE-BB-001	TBD	EXISTING NETWORK SWITCH (LOCATION TBD)	NA		
45	A												
46	A									HOLD			
47	A												
48	A												
49	A												
50	A												

CONTROL CABLE IDENTIFICATION:

-C DIGITAL CONTROL (24VDC, 125VDC & 120VAC)
-X ANALOG CONTROL (<50V, 4-20mA, RTD, ETC.)
-F FIBER OPTIC
-Z COMMUNICATION (ETHERNET, PROFIBUS, ETC.)
-CT CURRENT TRANSFORMER
-PT POTENTIAL TRANSFORMER

REVISION

REV	DATE	DR	CK	AP	DESCRIPTION
0	03/28/2025	SAM	CMM	CMH	ISSUED FOR CONSTRUCTION

ECI "Engineering with Distinction" ELECTRICAL CONSULTANTS, INC.

THIS DRAWING IS THE PROPERTY OF ELECTRICAL CONSULTANTS, INC. AND IS TO BE USED ONLY FOR THE SPECIFIC PROJECT IDENTIFIED ON THE DRAWING. NO REVISIONS SHALL BE MADE WITHOUT THE EXPRESSED WRITTEN CONSENT OF ELECTRICAL CONSULTANTS, INC.

DRAWN BY SAM	DATE 08/22/2024	WOODLAND PULP, LLC WOODLAND FISH LIFT PASSAGE	
CHECKED BY CMM	DATE 08/22/2024	CABLE SCHEDULE ANALOG CONTROL AND COMMUNICATION CABLES	
APPROVED BY CMH	DATE 08/22/2024	TECHNOLOGY HYDRO	DRAWING CATEGORY GENERAL
SCALE NONE		PROJECT NO. ARL-007 / DWG EE-AE-004	REV 0

RACEWAY AND CABLE SCHEDULE - MISCELLANEOUS CABLES

LINE	REV	CABLE No. SOURCE-DESTINATION-TYPE	CABLE TYPE	SOURCE DRAWING	SOURCE EQUIP. No.	SOURCE DESCRIPTION	VIA RACEWAY	DESTINATION DRAWING	DESTINATION EQUIP. No.	DESTINATION DESCRIPTION	VOLTAGE	LENGTH	COMMENTS
TEMPERATURE CONTROL CABLES													HOLD
1	A	IG1 - TS1 - C	2C #14	EE-GK-001	IG1	GATE ACTUATOR - IG1	RGS FR	EE-GK-001	TSIG1	TEMPERATURE SWITCH - IG1	TBD		VSC?
2	A	EG2 - TS2 - C	2C #14	EE-GK-002	EG2	GATE ACTUATOR - EG2	RGS FR	EE-GK-002	TSEG2	TEMPERATURE SWITCH - EG2	TBD		VSC?
3	A	VG3A - TS3A - C	2C #14	EE-GK-003 SH1	VG3A	GATE ACTUATOR - VG3A	RGS FR	EE-GK-003 SH1	TSVG3A	TEMPERATURE SWITCH - VG3A	TBD		VSC?
4	A	VG3B - TS3B - C	2C #14	EE-GK-003 SH2	VG3B	GATE ACTUATOR - VG3B	RGS FR	EE-GK-003 SH2	TSVG3B	TEMPERATURE SWITCH - VG3B	TBD		VSC?
5	A												
6	A	IG6 - TS6 - C	2C #14	EE-GK-006	IG6	GATE ACTUATOR - IG6	RGS FR	EE-GK-006	TSIG6	TEMPERATURE SWITCH - IG6	TBD		VSC?
7	A	AWSS7 - TS7 - C	2C #14	EE-GK-007	AWSS7	VALVE ACTUATOR - AWSS7	RGS FR	EE-GK-007	TSAWSS7	TEMPERATURE SWITCH - AWSS7	TBD		VSC?
8	A	AWSS8 - TS8 - C	2C #14	EE-GK-008	AWSS8	VALVE ACTUATOR - AWSS8	RGS FR	EE-GK-008	TSAWSS8	TEMPERATURE SWITCH - AWSS8	TBD		VSC?
9	A	AWSS9 - TS9 - C	2C #14	EE-GK-009	AWSS9	VALVE ACTUATOR - AWSS9	RGS FR	EE-GK-009	TSAWSS9	TEMPERATURE SWITCH - AWSS9	TBD		VSC?
10	A	IG10 - TS10 - C	2C #14	EE-GK-010	IG10	GATE ACTUATOR - IG10	RGS FR	EE-GK-010	TSIG10	TEMPERATURE SWITCH - IG10	TBD		VSC?
11	A	OWG11 - TS11 - C	2C #14	EE-GK-011	OWG11	GATE ACTUATOR - OWG11	RGS FR	EE-GK-011	TSOWG11	TEMPERATURE SWITCH - OWG11	TBD		VSC?
12	A	IG12 - TS12 - C	2C #14	EE-GK-012	IG12	GATE ACTUATOR - IG12	RGS FR	EE-GK-012	TSIG12	TEMPERATURE SWITCH - IG12	TBD		VSC?
13	A	OWG13 - TS13 - C	2C #14	EE-GK-013	OWG13	GATE ACTUATOR - OWG13	RGS FR	EE-GK-013	TSOWG13	TEMPERATURE SWITCH - OWG13	TBD		VSC?
14	A	DSG14 - TS14 - C	2C #14	EE-GK-014	DSG14	VALVE ACTUATOR - DSG14	RGS FR	EE-GK-014	TSDSG14	TEMPERATURE SWITCH - DSG14	TBD		VSC?
15	A	DSG15 - TS15 - C	2C #14	EE-GK-015	DSG15	VALVE ACTUATOR - DSG15	RGS FR	EE-GK-015	TSDSG15	TEMPERATURE SWITCH - DSG15	TBD		VSC?
16	A	IG16 - TS16 - C	2C #14	EE-GK-016	IG16	GATE ACTUATOR - IG16	RGS FR	EE-GK-016	TSIG16	TEMPERATURE SWITCH - IG16	TBD		VSC?
17	A	IG17 - TS17 - C	2C #14	EE-GK-017	IG17	GATE ACTUATOR - IG17	RGS FR	EE-GK-017	TSIG17	TEMPERATURE SWITCH - IG17	TBD		VSC?
18	A	TG18 - TS18 - C	2C #14	EE-GK-018	TG18	GATE ACTUATOR - TG18	RGS FR	EE-GK-018	TSTG18	TEMPERATURE SWITCH - TG18	TBD		VSC?
19	A	TG19 - TS19 - C	2C #14	EE-GK-019	TG19	GATE ACTUATOR - TG19	RGS FR	EE-GK-019	TSTG19	TEMPERATURE SWITCH - TG19	TBD		VSC?
20	A												
21	A												
22	A												
23	A												
24	A												
25	A												
26	A												
27	A												
28	A												
29	A												
30	A												
31	A												
32	A												
33	A												
34	A												
35	A												
36	A												
37	A												
38	A												
39	A												
40	A												
41	A												
42	A												
43	A												
44	A												
45	A												
46	A												
47	A												
48	A												
49	A												
50	A												

CONTROL CABLE IDENTIFICATION:

-C DIGITAL CONTROL (24VDC, 125VDC & 120VAC)
-X ANALOG CONTROL (<50V, 4-20mA, RTD, ETC.)
-F FIBER OPTIC
-Z COMMUNICATION (ETHERNET, PROFIBUS, ETC.)
-CT CURRENT TRANSFORMER
-PT POTENTIAL TRANSFORMER

REVISION

REV	DATE	DR	CK	AP	DESCRIPTION
0	03/28/2025	SAM	CMM	CMH	ISSUED FOR CONSTRUCTION

ECI "Engineering with Distinction" ELECTRICAL CONSULTANTS, INC.

THIS DRAWING IS THE PROPERTY OF ELECTRICAL CONSULTANTS, INC. AND IS TO BE USED ONLY FOR THE SPECIFIC PROJECT IDENTIFIED ON THE DRAWING. NO REVISIONS SHALL BE MADE WITHOUT THE EXPRESSED WRITTEN CONSENT OF ELECTRICAL CONSULTANTS, INC.

DRAWN BY SAM	DATE 08/22/2024	WOODLAND PULP, LLC WOODLAND FISH LIFT PASSAGE
CHECKED BY CMM	DATE 08/22/2024	CABLE SCHEDULE MISCELLANEOUS CABLES
APPROVED BY CMH	DATE 08/22/2024	TECHNOLOGY: HYDRO / DRAWING CATEGORY: GENERAL
SCALE: NONE	PROJECT NO. ARL-007	DWG EE-AE-005 / REV 0

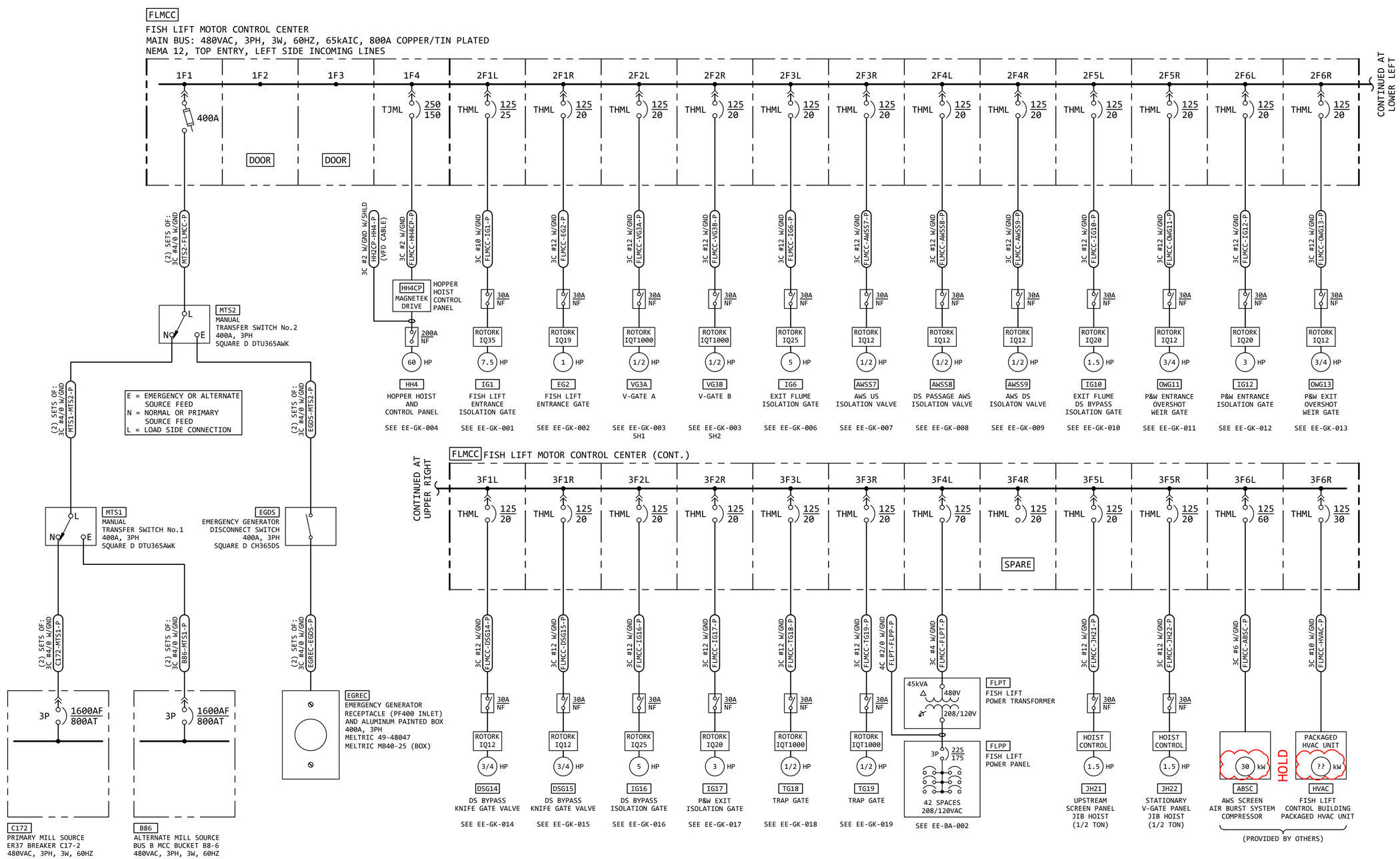

REVISION

REV	DATE	DR	CK	AP	DESCRIPTION
0	03/28/2025	SAM	CMM	CMH	ISSUED FOR CONSTRUCTION

ECI "Engineering with Distinction"
ELECTRICAL CONSULTANTS, INC.

THIS DRAWING IS THE PROPERTY OF ELECTRICAL CONSULTANTS, INC. AND IS TO BE USED ONLY FOR THE SPECIFIC PROJECT IDENTIFIED ON THE DRAWING. NO REVISIONS SHALL BE MADE WITHOUT THE EXPRESSED WRITTEN CONSENT OF ELECTRICAL CONSULTANTS, INC.

DRAWN BY: SAM	DATE: 02/22/2024	WOODLAND PULP, LLC WOODLAND FISH LIFT PASSAGE
CHECKED BY: CMM	DATE: 02/22/2024	ONE LINE DIAGRAM - 480VAC FISH LIFT SERVICE AND POWER DISTRIBUTION
APPROVED BY: CMH	DATE: 02/22/2024	TECHNOLOGY: HYDRO / DRAWING CATEGORY: OVERVIEW
SCALE: NONE	PROJECT NO.: ARL-007	DWG: EE-BA-001 / REV: 0

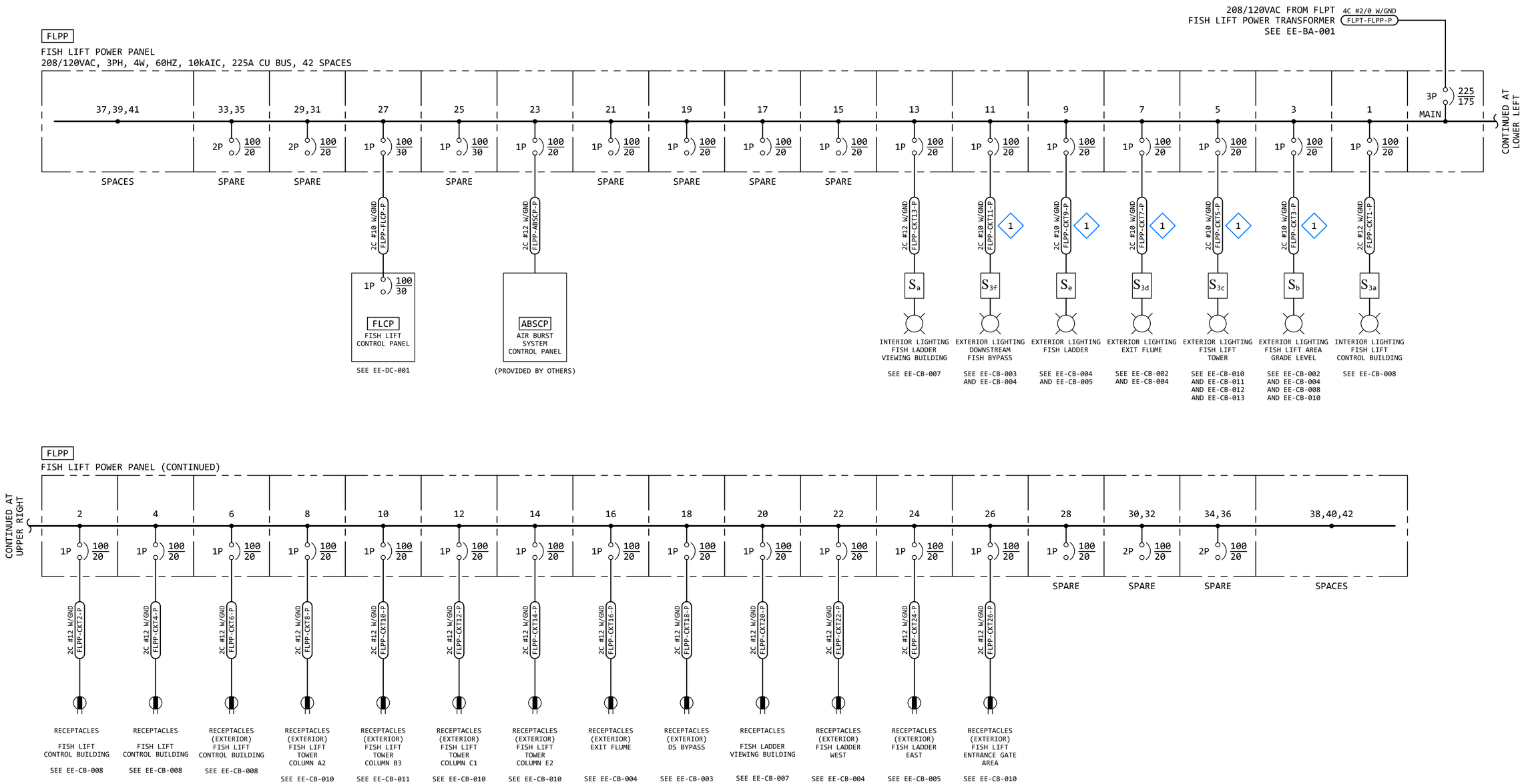

KEYED NOTES:

1. ALL HOME RUN CABLES FOR EXTERIOR LIGHTING CIRCUITS (THE CABLE BETWEEN THIS PANEL AND THE SWITCH) SHALL BE #10 AWG. ALL CABLES BEYOND THE SWITCH SHALL BE #12 AWG, UNLESS NOTED OTHERWISE.

REVISION

REV	DATE	DR	CK	AP	DESCRIPTION
0	03/28/2025	SAM	CMM	CMH	ISSUED FOR CONSTRUCTION

ECI "Engineering with Distinction"
ELECTRICAL CONSULTANTS, INC.

THIS DRAWING IS THE PROPERTY OF ELECTRICAL CONSULTANTS, INC. AND IS TO BE USED ONLY FOR THE SPECIFIC PROJECT IDENTIFIED ON THE DRAWING. NO REVISIONS SHALL BE MADE WITHOUT THE EXPRESSED WRITTEN CONSENT OF ELECTRICAL CONSULTANTS, INC.

DRAWN BY: SAM	DATE: 02/22/2024	WOODLAND PULP, LLC WOODLAND FISH LIFT PASSAGE
CHECKED BY: CMM	DATE: 02/22/2024	ONE LINE DIAGRAM - 208/120VAC FISH LIFT POWER DISTRIBUTION
APPROVED BY: CMH	DATE: 02/22/2024	TECHNOLOGY: HYDRO / DRAWING CATEGORY: OVERVIEW
SCALE: NONE	PROJECT NO.: ARL-007	DWG: EE-BA-002 / REV: 0

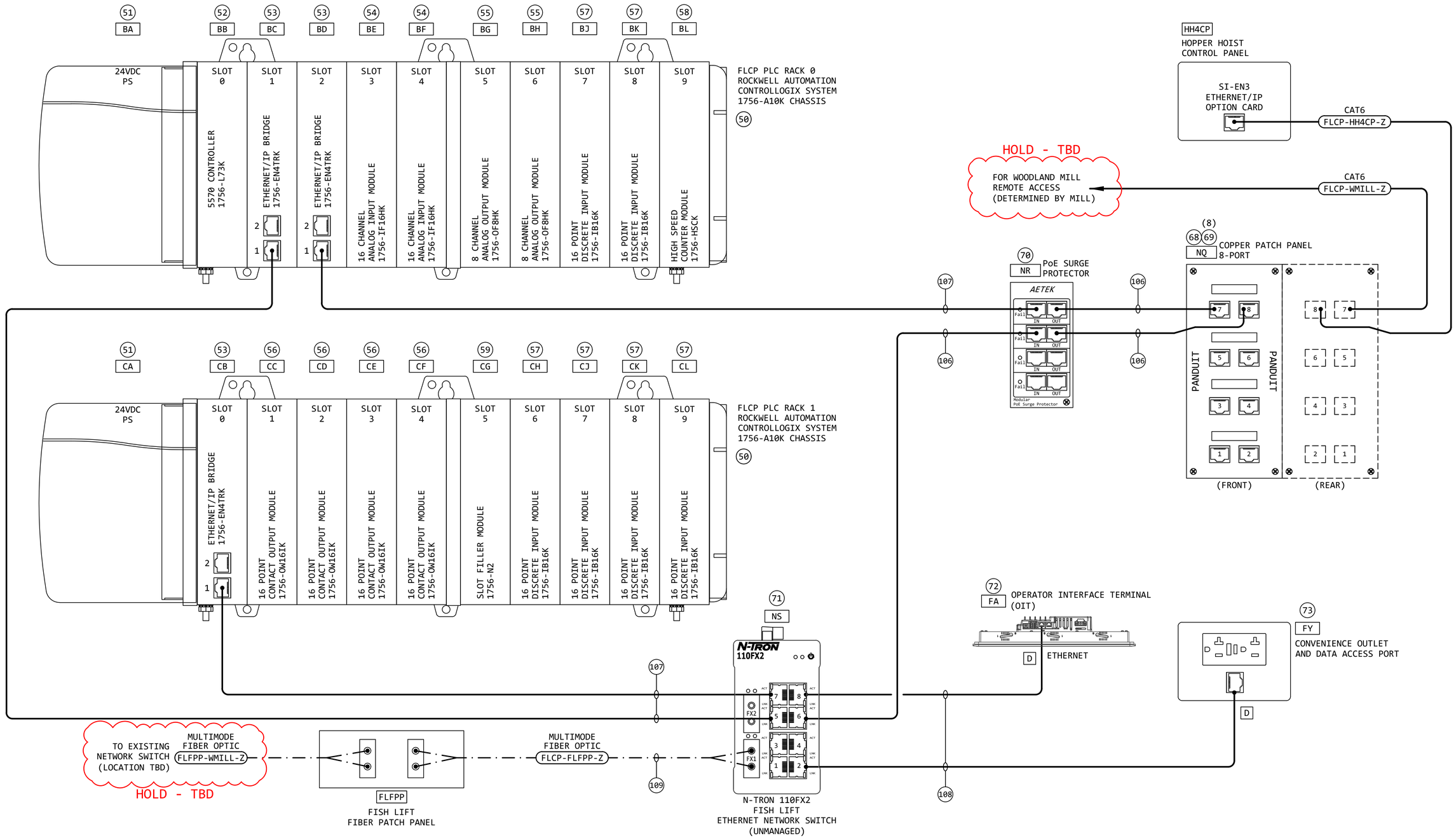

REVISION

REV	DATE	DR	CK	AP	DESCRIPTION
0	03/28/2025	SAM	CMM	CMH	ISSUED FOR CONSTRUCTION

NOTE:
ALL DEVICES SHOWN ON THIS DRAWING ARE LOCATED IN THE FISH LIFT CONTROL PANEL (FLCP) UNLESS NOTED OTHERWISE.

"Engineering with Distinction"
ELECTRICAL CONSULTANTS, INC.

THIS DRAWING IS THE PROPERTY OF ELECTRICAL CONSULTANTS, INC. AND IS TO BE USED ONLY FOR THE SPECIFIC PROJECT IDENTIFIED ON THE DRAWING. NO REVISIONS SHALL BE MADE WITHOUT THE EXPRESSED WRITTEN CONSENT OF ELECTRICAL CONSULTANTS, INC.

DRAWN BY: SAM	DATE: 02/22/2024	WOODLAND PULP, LLC WOODLAND FISH LIFT PASSAGE
CHECKED BY: CMM	DATE: 02/22/2024	NETWORK SYSTEM ARCHITECTURE FISH LIFT PASSAGE
APPROVED BY: CMH	DATE: 02/22/2024	TECHNOLOGY: HYDRO / DRAWING CATEGORY: OVERVIEW
SCALE: NONE	PROJECT NO.: ARL-007	DWG: EE-BB-001 / REV: 0

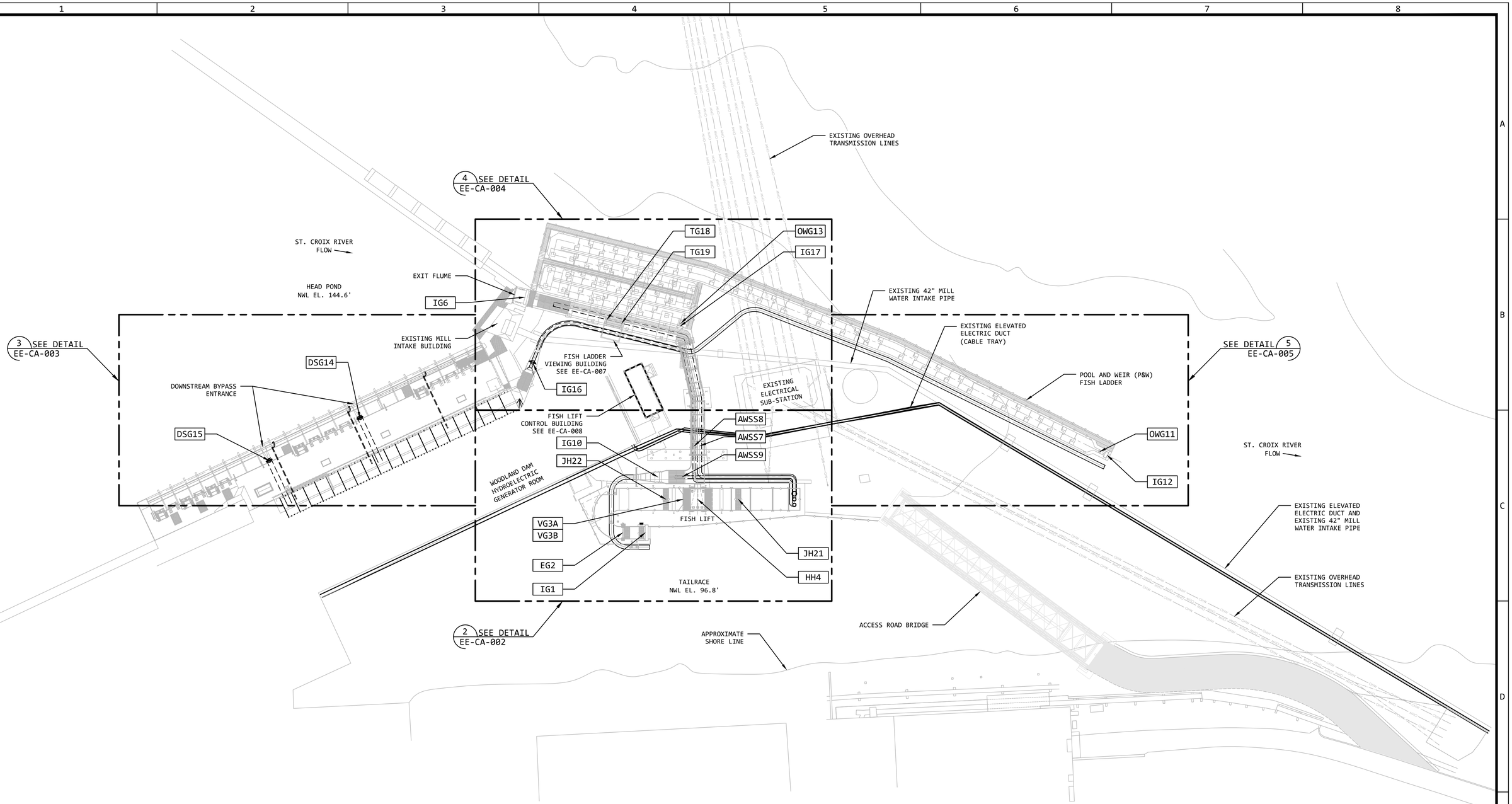

GENERAL ARRANGEMENT PLAN - FISH LIFT PASSAGE SITE (1)

NOTE: SEE DRAWINGS C-010, M-001 & S-003

SCALE: 1" = 30' --

N

30' 0 30' 60'

BAR SCALE
1" = 30'
CHECK GRAPHIC SCALE BEFORE USING

REVISION					
REV	DATE	DR	CK	AP	DESCRIPTION
0	03/28/2025	SAM	CMM	CMH	ISSUED FOR CONSTRUCTION

"Engineering with Distinction"
ELECTRICAL CONSULTANTS, INC.

THIS DRAWING IS THE PROPERTY OF ELECTRICAL CONSULTANTS, INC. AND IS TO BE USED ONLY FOR THE SPECIFIC PROJECT IDENTIFIED ON THE DRAWING. NO REVISIONS SHALL BE MADE WITHOUT THE EXPRESSED WRITTEN CONSENT OF ELECTRICAL CONSULTANTS, INC.

DRAWN BY: SAM	DATE: 08/22/2024	WOODLAND PULP, LLC WOODLAND FISH LIFT PASSAGE	
CHECKED BY: CMM	DATE: 08/22/2024	GENERAL ARRANGEMENT PLAN FISH LIFT PASSAGE SITE	
APPROVED BY: CMH	DATE: 08/22/2024	TECHNOLOGY: HYDRO	DRAWING CATEGORY: LAYOUTS
SCALE: AS NOTED	PROJECT NO.: ARL-007	DWG: EE-CA-001	REV: 0

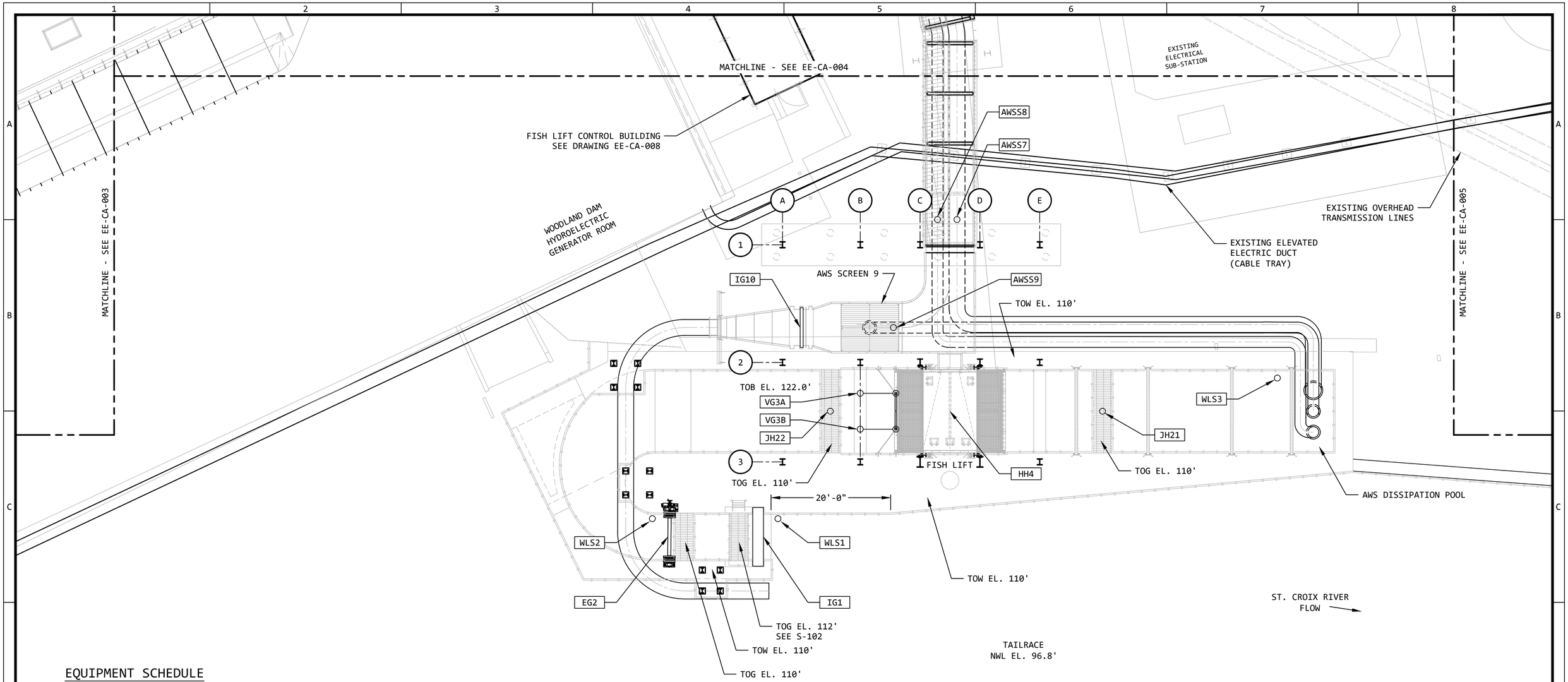

EQUIPMENT SCHEDULE

IG1	FISH LIFT ENTRANCE ISOLATION GATE SEE M-100	IG10	EXIT FLUME DS BYPASS ISOLATION GATE SEE M-121
EG2	FISH LIFT ENTRANCE GATE SEE M-101	JH21	UPSTREAM SCREEN PANEL JIB HOIST
VG3A	V-GATE A SEE M-102	JH22	STATIONARY V-GATE PANEL JIB HOIST
VG3B	V-GATE B SEE M-102	WLS1	LIFT TAILRACE WATER LEVEL SENSOR
HH4	HOPPER HOIST	WLS2	LIFT ENTRANCE CHANNEL WATER LEVEL SENSOR
AWSS7	AWS US ISOLATION VALVE SEE C-150	WLS3	LIFT US WEIR WATER LEVEL SENSOR
AWSS8	DS PASSAGE AWS ISOLATION VALVE SEE C-151		
AWSS9	AWS DS ISOLATION VALVE SEE C-152		

GENERAL ARRANGEMENT PLAN - FISH LIFT AREA (2)

NOTE: SEE DRAWINGS C-100, S-100, S-200 & S-210

SCALE: 1/8" = 1'-0" (--)

12' 8' 4' 0 8' 16'

BAR SCALE
1/8" = 1'-0"
CHECK GRAPHIC SCALE BEFORE USING

N

REVISION

REV	DATE	DR	CK	AP	DESCRIPTION
0	03/28/2025	SAM	CMM	CMH	ISSUED FOR CONSTRUCTION

"Engineering with Distinction"
ELECTRICAL CONSULTANTS, INC.

THIS DRAWING IS THE PROPERTY OF ELECTRICAL CONSULTANTS, INC. AND IS TO BE USED ONLY FOR THE SPECIFIC PROJECT IDENTIFIED ON THE DRAWING. NO REVISIONS SHALL BE MADE WITHOUT THE EXPRESSED WRITTEN CONSENT OF ELECTRICAL CONSULTANTS, INC.

DRAWN BY: SAM	DATE: 08/22/2024	WOODLAND PULP, LLC WOODLAND FISH LIFT PASSAGE
CHECKED BY: CMM	DATE: 08/22/2024	GENERAL ARRANGEMENT PLAN FISH LIFT AREA
APPROVED BY: CMH	DATE: 08/22/2024	TECHNOLOGY: HYDRO / DRAWING CATEGORY: LAYOUTS
SCALE: AS NOTED	PROJECT NO.: ARL-007	DWG: EE-CA-002 / REV: 0

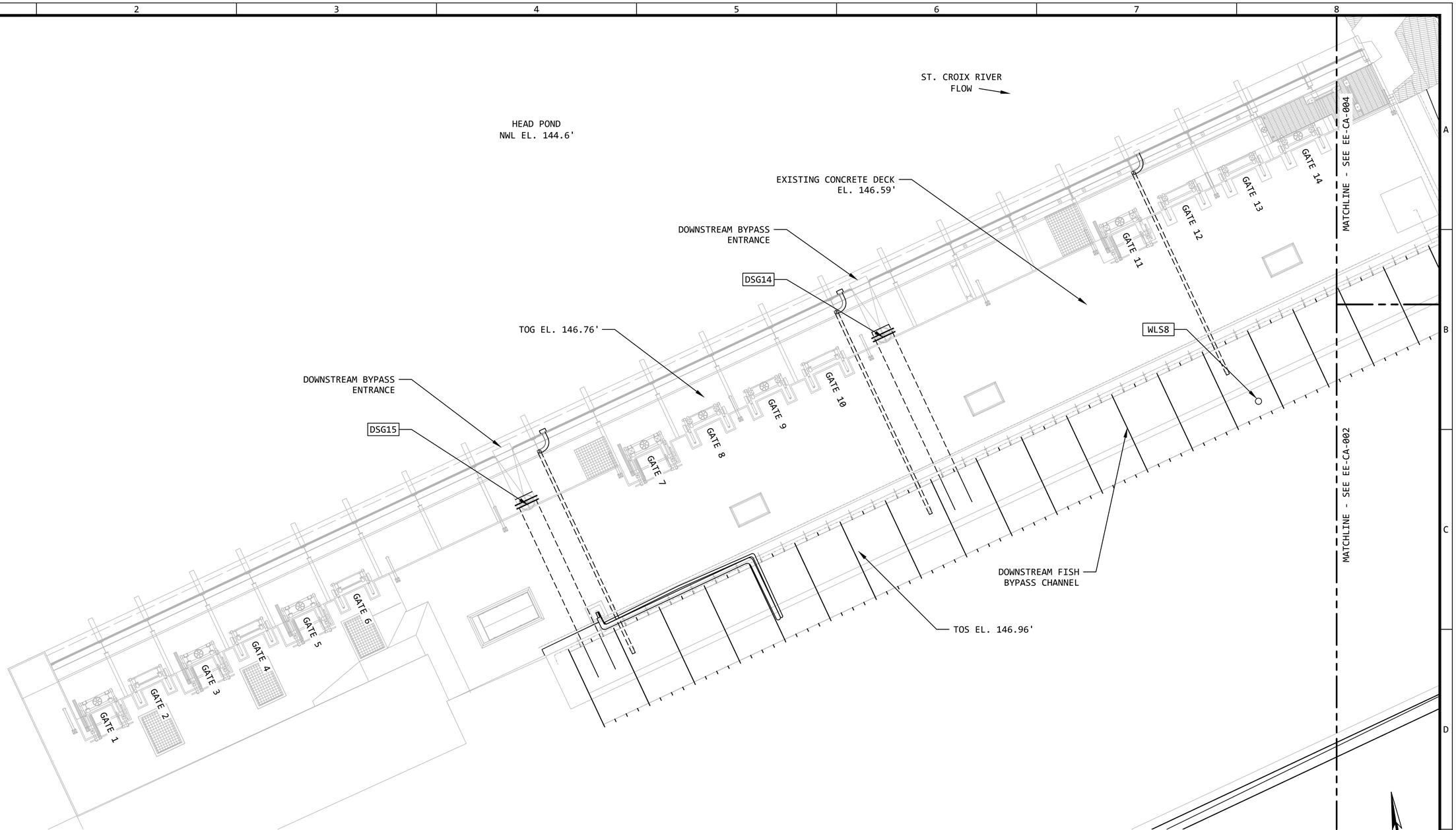

GENERAL ARRANGEMENT PLAN - DOWNSTREAM FISH BYPASS AREA (3)

NOTE: SEE DRAWINGS C-160 & S-160

SCALE: 1/8" = 1'-0"

12' 8' 4' 0 8' 16'

BAR SCALE
1/8" = 1'-0"
CHECK GRAPHIC SCALE BEFORE USING

N

EQUIPMENT SCHEDULE

DSG14	DS BYPASS KNIFE GATE VALVE SEE M-160 & S-160
DSG15	DS BYPASS KNIFE GATE VALVE SEE M-160 & S-160
WLS8	INSIDE EXIT FLUME WATER LEVEL SENSOR

REVISION

REV	DATE	DR	CK	AP	DESCRIPTION
0	03/28/2025	SAM	CMM	CMH	ISSUED FOR CONSTRUCTION

ECI "Engineering with Distinction"
ELECTRICAL CONSULTANTS, INC.

THIS DRAWING IS THE PROPERTY OF ELECTRICAL CONSULTANTS, INC. AND IS TO BE USED ONLY FOR THE SPECIFIC PROJECT IDENTIFIED ON THE DRAWING. NO REVISIONS SHALL BE MADE WITHOUT THE EXPRESSED WRITTEN CONSENT OF ELECTRICAL CONSULTANTS, INC.

DRAWN BY: SAM	DATE: 08/22/2024	WOODLAND PULP, LLC WOODLAND FISH LIFT PASSAGE
CHECKED BY: CMM	DATE: 08/22/2024	GENERAL ARRANGEMENT PLAN DOWNSTREAM FISH BYPASS AREA
APPROVED BY: CMH	DATE: 08/22/2024	TECHNOLOGY: HYDRO / DRAWING CATEGORY: LAYOUTS
SCALE: AS NOTED	PROJECT NO.: ARL-007	DWG: EE-CA-003 / REV: 0

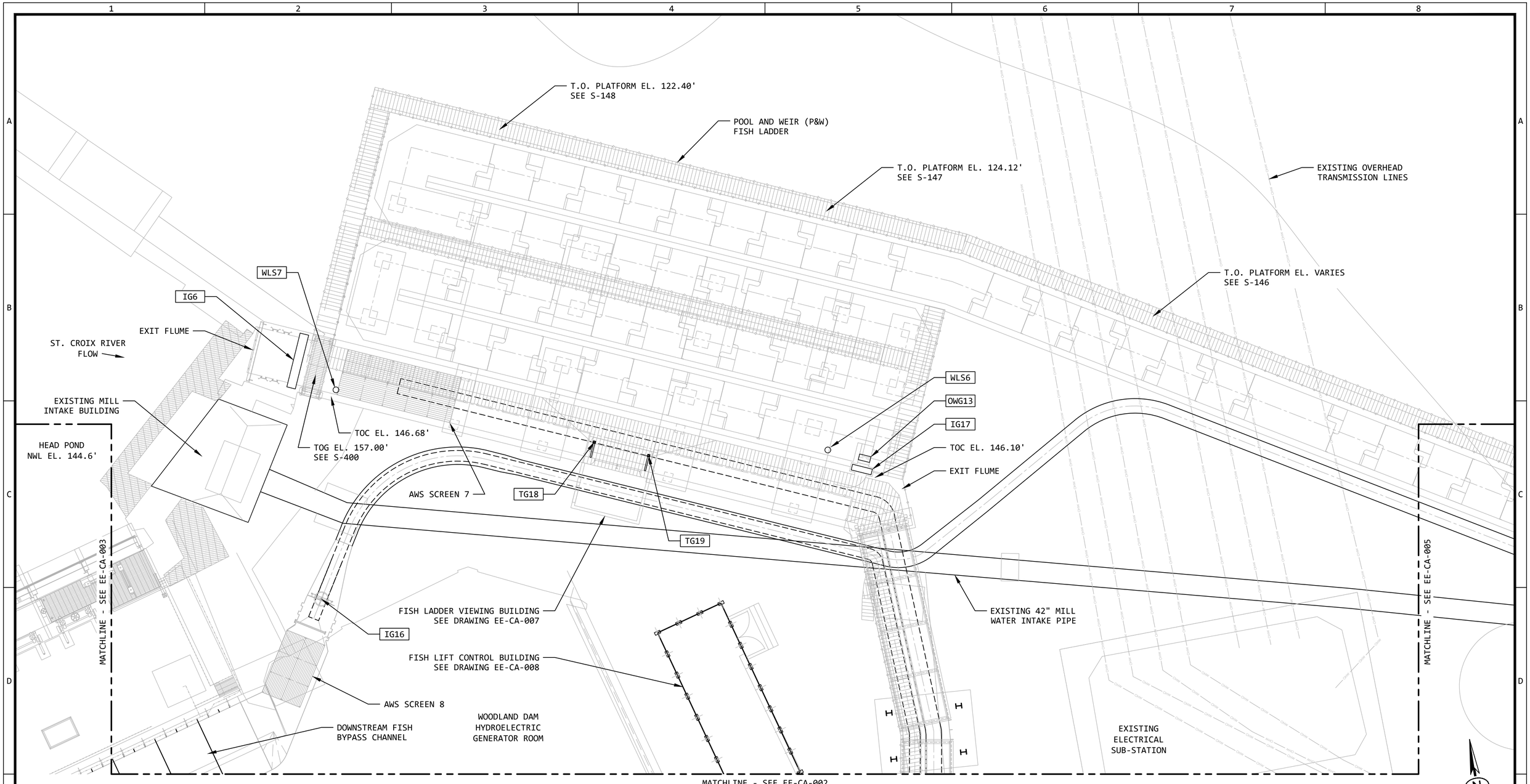

GENERAL ARRANGEMENT PLAN - EXIT FLUME AND FISH LADDER AREAS (4)

NOTE: SEE DRAWINGS C-120, C-140, S-120 & S-140 SCALE: 1/8" = 1'-0" --

EQUIPMENT SCHEDULE

IG6	EXIT FLUME ISOLATION GATE SEE M-120	IG18	TRAP GATE
OWG13	P&W EXIT OVERSHOT WEIR GATE SEE M-142	IG19	TRAP GATE
IG16	DS BYPASS ISOLATION GATE SEE M-163	WLS6	P&W INSIDE EXIT WATER LEVEL SENSOR
IG17	P&W EXIT ISOLATION GATE SEE M-143	WLS7	INSIDE EXIT FLUME ENTRANCE WATER LEVEL SENSOR

REVISION

REV	DATE	DR	CK	AP	DESCRIPTION
0	03/28/2025	SAM	CMM	CMH	ISSUED FOR CONSTRUCTION

"Engineering with Distinction"
ELECTRICAL CONSULTANTS, INC.

THIS DRAWING IS THE PROPERTY OF ELECTRICAL CONSULTANTS, INC. AND IS TO BE USED ONLY FOR THE SPECIFIC PROJECT IDENTIFIED ON THE DRAWING. NO REVISIONS SHALL BE MADE WITHOUT THE EXPRESSED WRITTEN CONSENT OF ELECTRICAL CONSULTANTS, INC.

DRAWN BY: SAM	DATE: 08/22/2024	WOODLAND PULP, LLC WOODLAND FISH LIFT PASSAGE
CHECKED BY: CMM	DATE: 08/22/2024	GENERAL ARRANGEMENT PLAN EXIT FLUME AND FISH LADDER AREAS
APPROVED BY: CMH	DATE: 08/22/2024	TECHNOLOGY: HYDRO / DRAWING CATEGORY: LAYOUTS
SCALE: AS NOTED	PROJECT NO.: ARL-007	DWG: EE-CA-004 / REV: 0

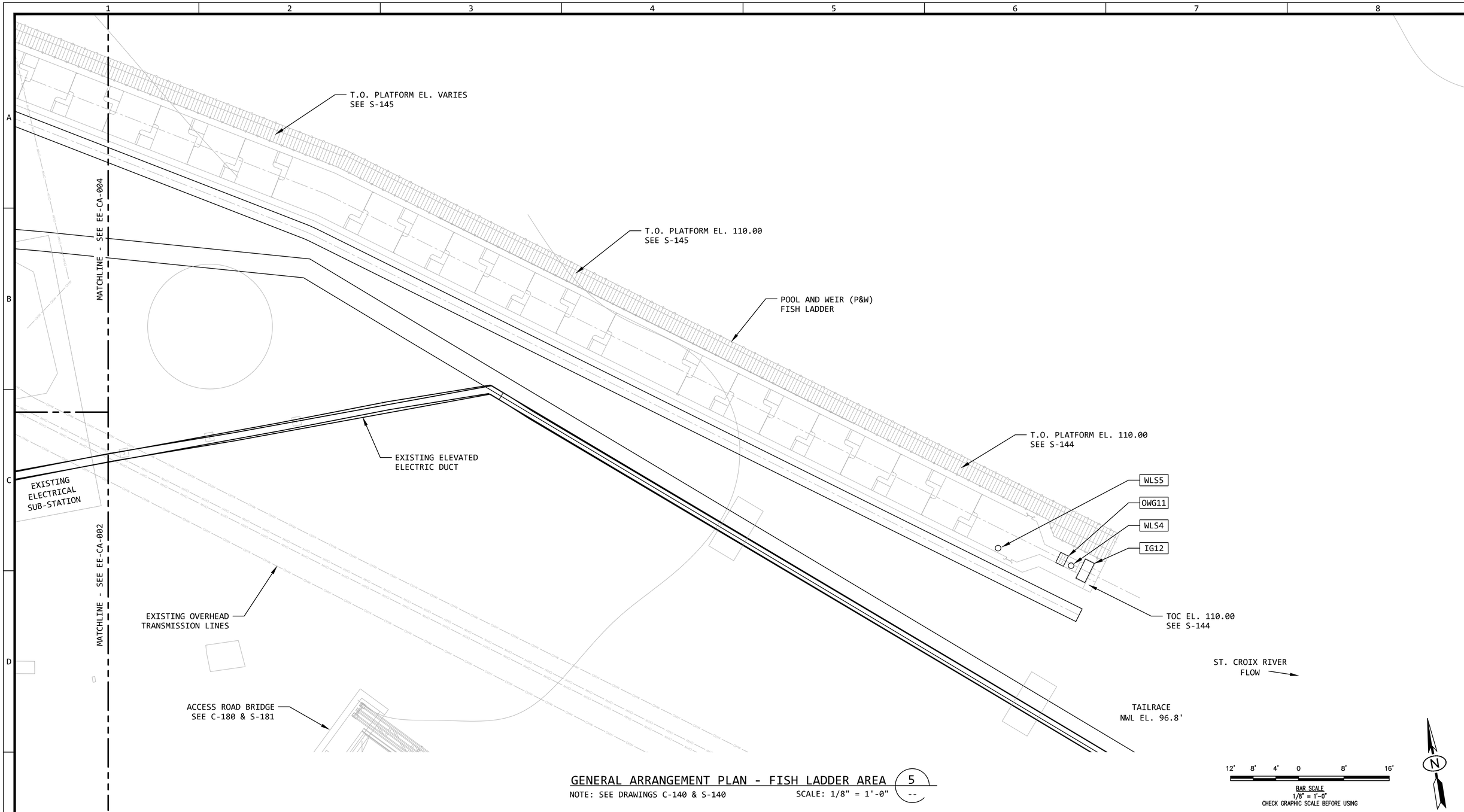

GENERAL ARRANGEMENT PLAN - FISH LADDER AREA (5)

NOTE: SEE DRAWINGS C-140 & S-140 SCALE: 1/8" = 1'-0"

EQUIPMENT SCHEDULE

OWG11	P&W ENTRANCE OVERSHOT WEIR GATE SEE M-141	WLS4	P&W TAIL WATER ENTRANCE WATER LEVEL SENSOR
IG12	P&W ENTRANCE ISOLATION GATE SEE M-140	WLS5	P&W INSIDE ENTRANCE WATER LEVEL SENSOR

REVISION

REV	DATE	DR	CK	AP	DESCRIPTION
0	03/28/2025	SAM	CMM	CMH	ISSUED FOR CONSTRUCTION

"Engineering with Distinction"
ELECTRICAL CONSULTANTS, INC.

THIS DRAWING IS THE PROPERTY OF ELECTRICAL CONSULTANTS, INC. AND IS TO BE USED ONLY FOR THE SPECIFIC PROJECT IDENTIFIED ON THE DRAWING. NO REVISIONS SHALL BE MADE WITHOUT THE EXPRESSED WRITTEN CONSENT OF ELECTRICAL CONSULTANTS, INC.

DRAWN BY: SAM	DATE: 08/22/2024	WOODLAND PULP, LLC WOODLAND FISH LIFT PASSAGE
CHECKED BY: CMM	DATE: 08/22/2024	GENERAL ARRANGEMENT PLAN FISH LADDER AREA
APPROVED BY: CMH	DATE: 08/22/2024	TECHNOLOGY: HYDRO / DRAWING CATEGORY: LAYOUTS
SCALE: AS NOTED	PROJECT NO.: ARL-007	DWG: EE-CA-005 / REV: 0

3' 2' 1' 0 2' 4'

BAR SCALE
1/2" = 1'-0"
CHECK GRAPHIC SCALE BEFORE USING

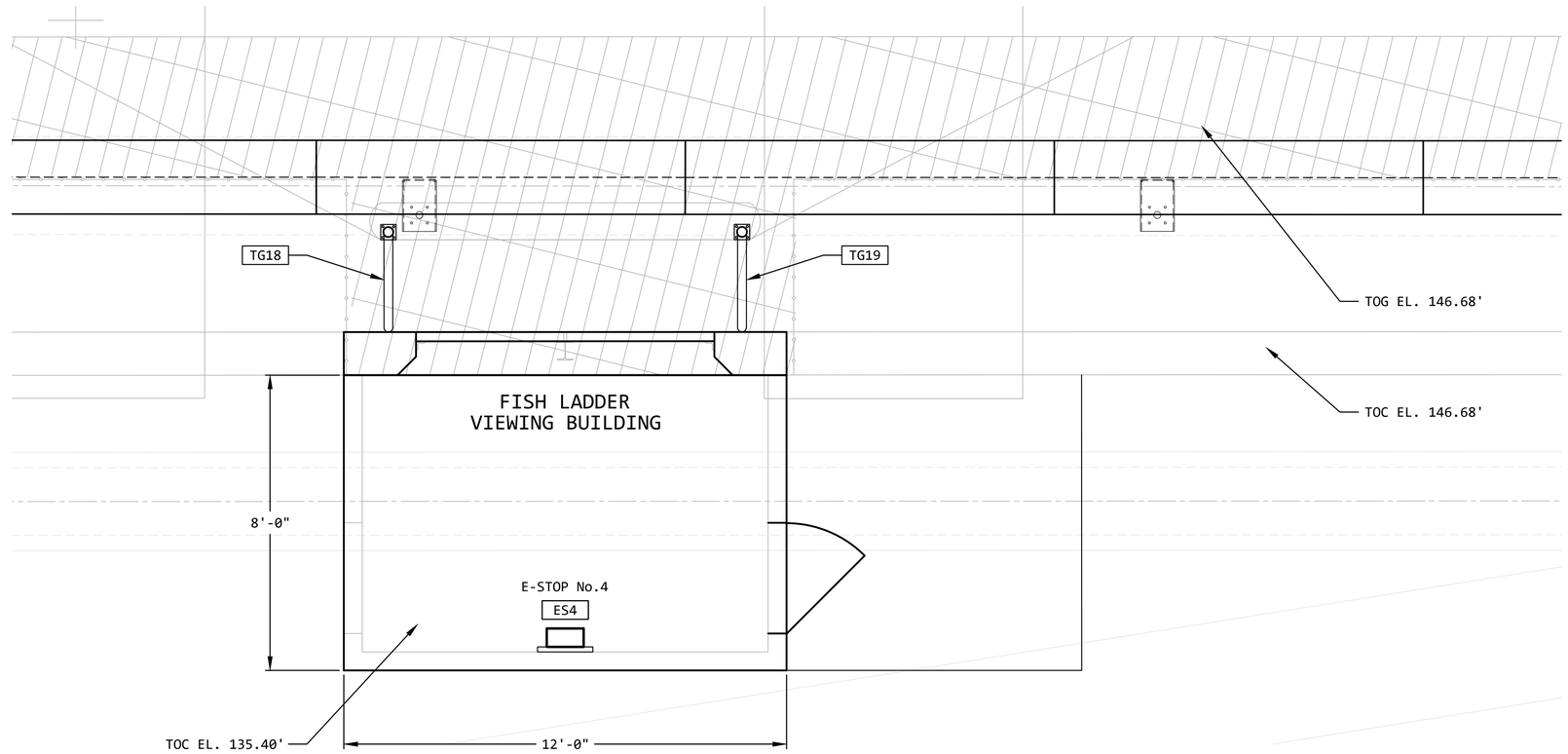

GENERAL ARRANGEMENT PLAN - FISH LADDER VIEWING BUILDING (7 / --)

NOTE: SEE DRAWING C-123 & S-120

SCALE: 1/2" = 1'-0"

EQUIPMENT SCHEDULE

IG18 TRAP GATE

IG19 TRAP GATE

REVISION

REV	DATE	DR	CK	AP	DESCRIPTION
0	03/28/2025	SAM	CMM	CMH	ISSUED FOR CONSTRUCTION

"Engineering with Distinction"
ECI ELECTRICAL CONSULTANTS, INC.

THIS DRAWING IS THE PROPERTY OF ELECTRICAL CONSULTANTS, INC. AND IS TO BE USED ONLY FOR THE SPECIFIC PROJECT IDENTIFIED ON THE DRAWING. NO REVISIONS SHALL BE MADE WITHOUT THE EXPRESSED WRITTEN CONSENT OF ELECTRICAL CONSULTANTS, INC.

DRAWN BY: SAM	DATE: 08/22/2024	WOODLAND PULP, LLC WOODLAND FISH LIFT PASSAGE
CHECKED BY: CMM	DATE: 08/22/2024	GENERAL ARRANGEMENT PLAN FISH LADDER VIEWING BUILDING
APPROVED BY: CMH	DATE: 08/22/2024	TECHNOLOGY: HYDRO / DRAWING CATEGORY: LAYOUTS
SCALE: AS NOTED	PROJECT NO.: ARL-007	DWG: EE-CA-007 / REV: 0

3' 2' 1' 0 2' 4'

BAR SCALE
1/2" = 1'-0"
CHECK GRAPHIC SCALE BEFORE USING

KEYED NOTES:

1. THE CONTRACTOR SHALL PROVIDE FLOOR MOUNTED UNISTRUT STRUCTURES FOR ALL NON-FLOOR MOUNTED EQUIPMENT AND/OR PANELS LOCATED IN THE FISH LIFT CONTROL BUILDING. DO NOT ATTACH THE UNISTRUT STRUCTURES TO THE WALL.
2. THE GROUND BAR SHALL BE MOUNTED 9' AFF, AS REQUIRED. CONNECT TO THE PIGTAIL RESERVED FOR THIS PURPOSE. SEE EE-CG-008 FOR DETAILS.
3. THE CONTRACTOR SHALL PROVIDE CONCRETE HOUSEKEEPING PADS FOR ALL FLOOR MOUNTED ELECTRICAL EQUIPMENT INSTALLED. THE HOUSEKEEPING PADS SHALL BE A MINIMUM OF 4" THICK, UNLESS NOTED OTHERWISE. THE FACE OF THE PAD SHALL EXTEND 2" BEYOND THE FACE OF THE EQUIPMENT. PROVIDE A 3/4" CHAMFERED EDGE.

EQUIPMENT SCHEDULE

ABSC	AIR BURST SYSTEM COMPRESSOR (50"L x 32"W x 63"H) [FINAL DETAILS T0 BE DETERMINED]
ABSR	AIR BURST SYSTEM RECEIVER (42"L x 42"W x 102"H) [FINAL DETAILS T0 BE DETERMINED]
ABSCP	AIR BURST SYSTEM CONTROL PANEL [FINAL DETAILS T0 BE DETERMINED]
EGDS	EMERGENCY GENERATOR DISCONNECT SWITCH 400A, 600VAC/VDC, 3POLE, 350HP, NEMA 4 SAFETY SWITCH, HEAVY DUTY, FUSIBLE. SQUARE D CAT. No. CH365DS
EGREC	EMERGENCY GENERATOR RECEPTACLE 400A, 277/480VAC, 3P+N+G, +4AUX CONTACTS WITH GRAY PAINTED ALUMINUM BOX, 2 1/2" NPT FITTING. MELTRIC 49-48047 PF400 INLET, WITH MB40-25 BOX
FLCP	FISH LIFT CONTROL PANEL HOFFMAN NEMA 12 ENCLOSURE, FLOOR MOUNT SEE EE-CE-002 (ALL SHEETS)
FLFPP	FISH LIFT FIBER PATCH PANEL DOUBLE-HINGED NEMA 12 ENCLOSURE, FOR 19" RACK MOUNTED EQUIPMENT, WALL MOUNTED, PAINTED STEEL WITH LOCKABLE WING KNOB HOFFMAN PROTEK PTHS162415G4, OR APPROVED EQUAL. SEE EE-BB-001
FLMCC	FISH LIFT MOTOR CONTROL CENTER 800A, 480VAC, 3PH, 3W, 60HZ ROCKWELL AUTOMATION CENTERLINE 2100 SEE EE-BA-001
FLPT	FISH LIFT POWER TRANSFORMER 45kVA, 480VAC-208/120VAC, 3PH, 4W, 60HZ DRY-TYPE VENTILATED, CLASS AA, NEMA 2 ENCLOSURE SEE EATON DRAWINGS FR940 AND 280B
FLPP	FISH LIFT POWER PANEL 225A, 42 CIRCUIT, 208/120VAC, 3PH, 4W, 60HZ SEE EE-BA-002
GBAR	FISH LIFT CONTROL BUILDING GROUND BAR 1/4" x 4" x 24" SOLID COPPER GROUND BAR WITH INSULATORS SEE EE-CG-011, DETAIL 2, GROUND BAR DETAIL "GB".
HVAC	FISH LIFT CONTROL BUILDING HVAC UNIT 480VAC, 3PH, 3W [FINAL DETAILS T0 BE DETERMINED]
MTS1	MANUAL TRANSFER SWITCH No.1 400A, 600VAC/250VDC, 3POLE, 350HP, NEMA 1 SAFETY SWITCH, DOUBLE THROW, NON-FUSIBLE. SQUARE D CAT. No. DTU365AWK
MTS2	MANUAL TRANSFER SWITCH No.2 400A, 600VAC/250VDC, 3POLE, 350HP, NEMA 1 SAFETY SWITCH, DOUBLE THROW, NON-FUSIBLE. SQUARE D CAT. No. DTU365AWK

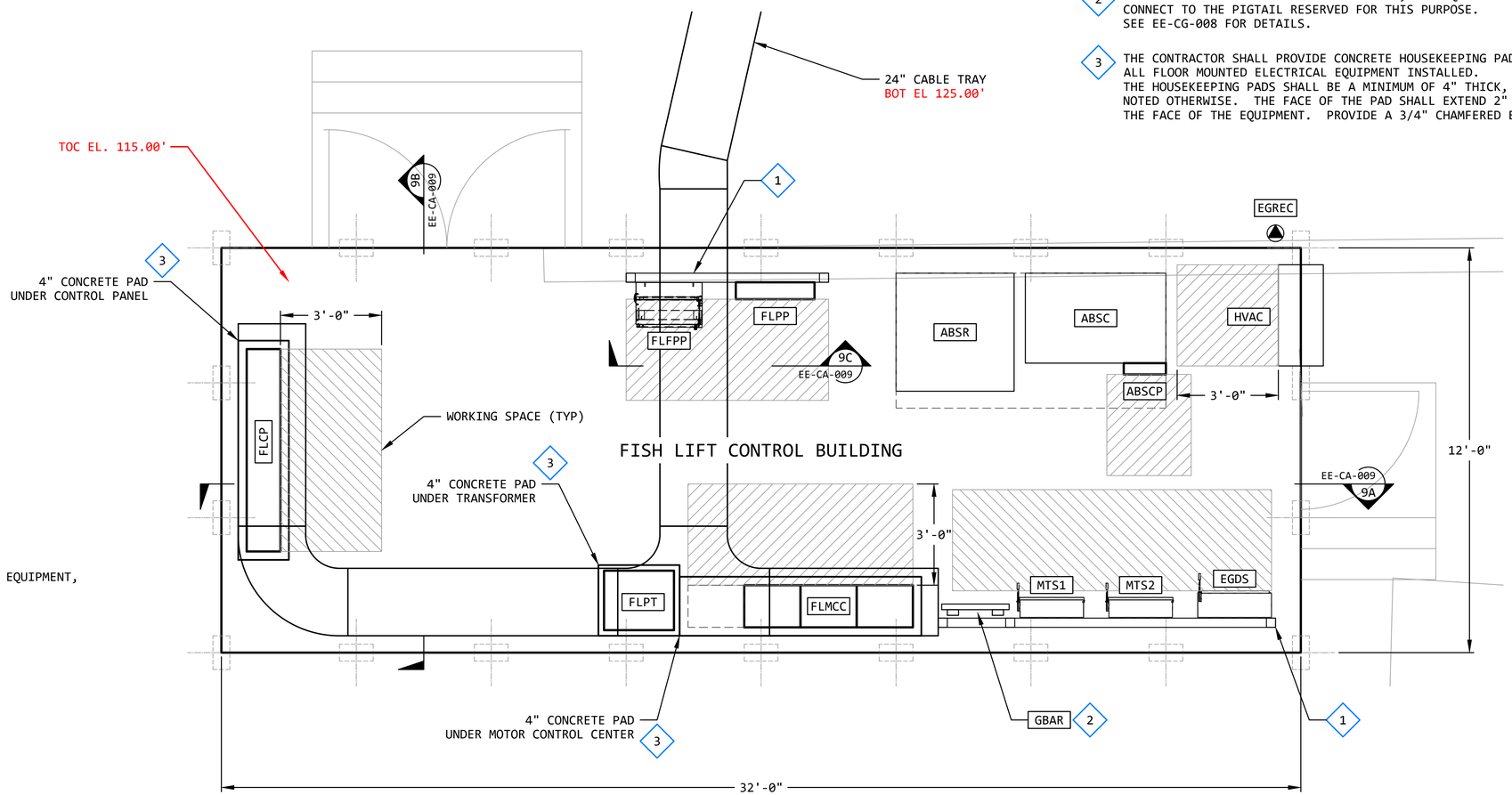

GENERAL ARRANGEMENT PLAN - FISH LIFT CONTROL BUILDING (8 / --)

NOTE: SEE DRAWING S-190

SCALE: 1/2" = 1'-0"

REVISION					
REV	DATE	DR	CK	AP	DESCRIPTION
0	03/28/2025	SAM	CMM	CMH	ISSUED FOR CONSTRUCTION

"Engineering with Distinction"
ELECTRICAL CONSULTANTS, INC.

THIS DRAWING IS THE PROPERTY OF ELECTRICAL CONSULTANTS, INC. AND IS TO BE USED ONLY FOR THE SPECIFIC PROJECT IDENTIFIED ON THE DRAWING. NO REVISIONS SHALL BE MADE WITHOUT THE EXPRESSED WRITTEN CONSENT OF ELECTRICAL CONSULTANTS, INC.

DRAWN BY: SAM	DATE: 08/22/2024	WOODLAND PULP, LLC WOODLAND FISH LIFT PASSAGE
CHECKED BY: CMM	DATE: 08/22/2024	GENERAL ARRANGEMENT PLAN FISH LIFT CONTROL BUILDING
APPROVED BY: CMH	DATE: 08/22/2024	TECHNOLOGY: HYDRO / DRAWING CATEGORY: LAYOUTS
SCALE: AS NOTED	PROJECT NO.: ARL-007	DWG: EE-CA-008 / REV: 0

BAR SCALE
1/2" = 1'-0"
CHECK GRAPHIC SCALE BEFORE USING

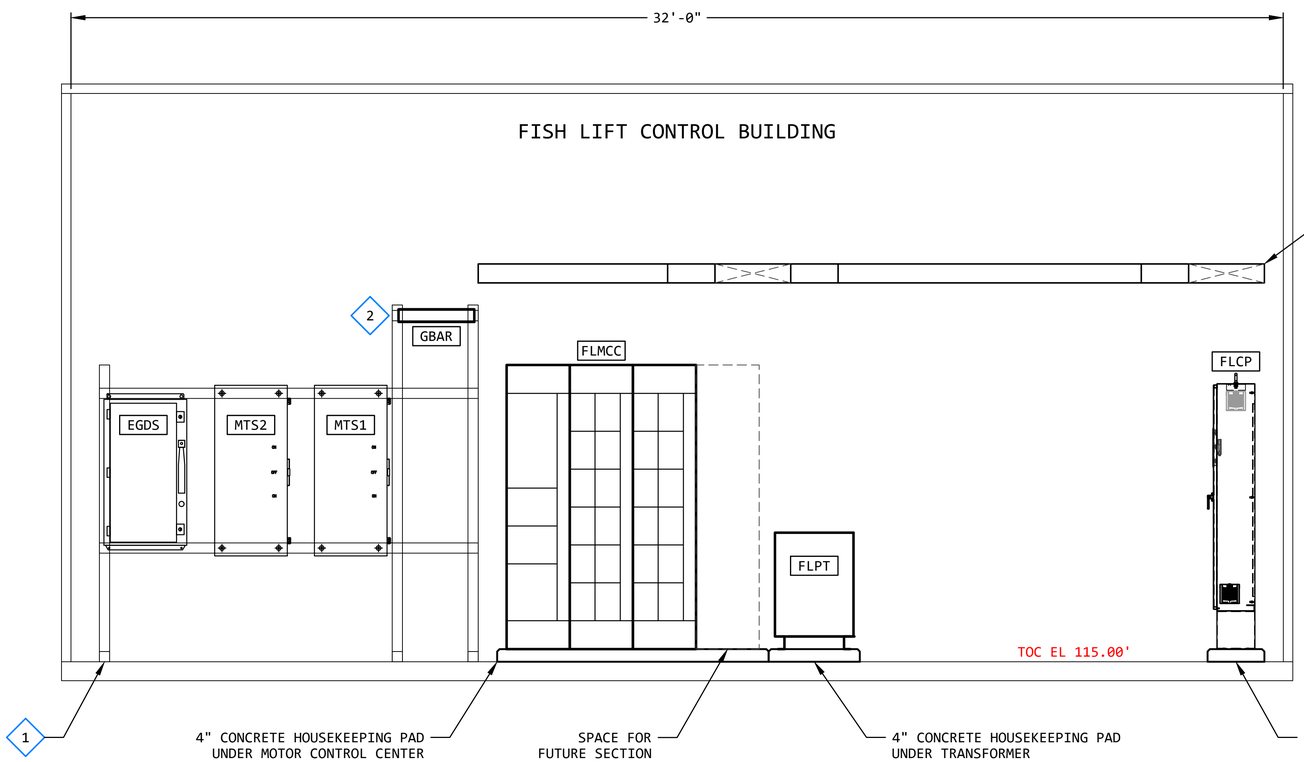

ELEVATION - INSIDE WEST WALL (9A / EE-CA-008)
SCALE: 1/2" = 1'-0"

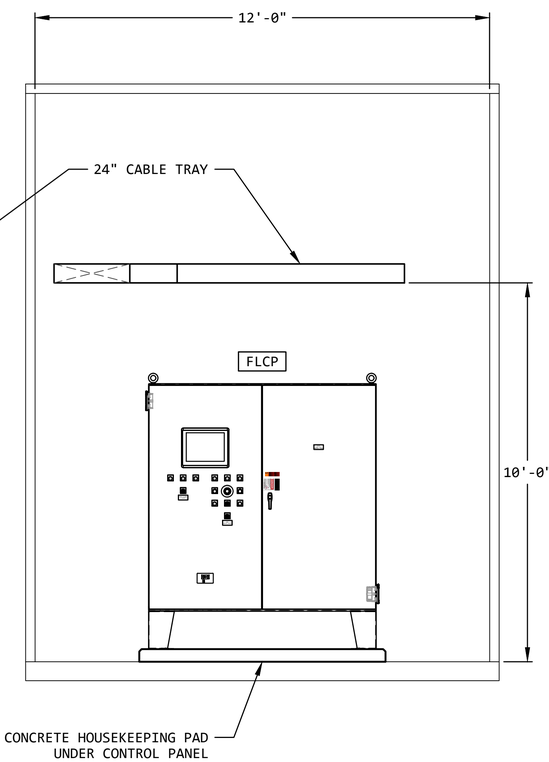

ELEVATION - INSIDE NORTH WALL (9B / EE-CA-008)
SCALE: 1/2" = 1'-0"

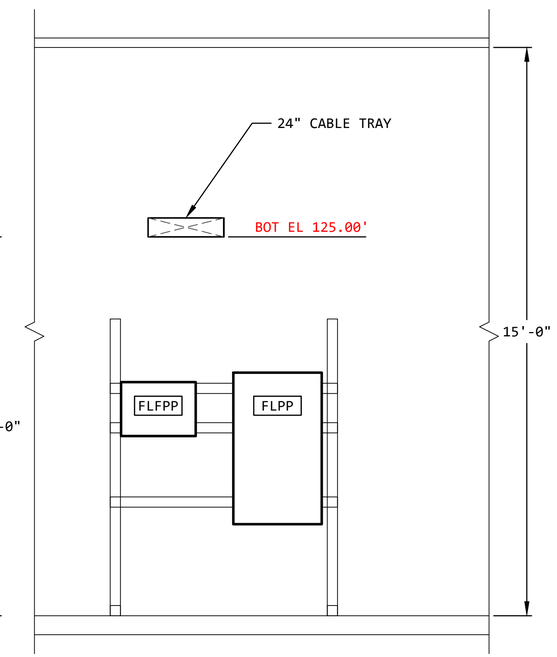

ELEVATION - INSIDE EAST WALL (9C / EE-CA-008)
SCALE: 1/2" = 1'-0"

KEYED NOTES:

1. THE CONTRACTOR SHALL PROVIDE FLOOR MOUNTED UNISTRUT STRUCTURES FOR ALL NON-FLOOR MOUNTED EQUIPMENT AND/OR PANELS LOCATED IN THE FISH LIFT CONTROL BUILDING. DO NOT ATTACH THE UNISTRUT STRUCTURES TO THE WALL.
2. THE GROUND BAR SHALL BE MOUNTED 9' AFF, AS REQUIRED. CONNECT TO THE PIGTAIL RESERVED FOR THIS PURPOSE. SEE EE-CG-010 FOR DETAILS.

REVISION

REV	DATE	DR	CK	AP	DESCRIPTION
0	03/28/2025	SAM	CMM	CMH	ISSUED FOR CONSTRUCTION

ELECTRICAL CONSULTANTS, INC.
"Engineering with Distinction"

THIS DRAWING IS THE PROPERTY OF ELECTRICAL CONSULTANTS, INC. AND IS TO BE USED ONLY FOR THE SPECIFIC PROJECT IDENTIFIED ON THE DRAWING. NO REVISIONS SHALL BE MADE WITHOUT THE EXPRESSED WRITTEN CONSENT OF ELECTRICAL CONSULTANTS, INC.

DRAWN BY: SAM	DATE: 08/22/2024	WOODLAND PULP, LLC WOODLAND FISH LIFT PASSAGE
CHECKED BY: CMM	DATE: 08/22/2024	ELEVATION PLAN FISH LIFT CONTROL BUILDING
APPROVED BY: CMH	DATE: 08/22/2024	TECHNOLOGY: HYDRO / DRAWING CATEGORY: LAYOUTS
SCALE: AS NOTED	PROJECT NO.: ARL-007	DWG: EE-CA-009 / REV: 0

LIGHTING FIXTURE SCHEDULE

TYPE	DESCRIPTION	MANUFACTURER	CATALOG No.	LAMP TYPE OR SELECTION	FIXTURE LUMENS	FIXTURE WATTS	VOLTAGE	MOUNTING	COMMENTS
FL	LED FLOOD LIGHT, MEDIUM DISTRIBUTION	HALCO	SFLD1-LS-CS-U-BZ-PC	4000K LED	4050-4350	30	120VAC	VARIES	UNIVERSAL INPUT VOLTAGE CS: COLOR SELECTABLE
LS	LED LINEAR STRIP, 4 FT, GASKETED	HALCO	LS4/36U40	4000K LED	4903	36	120VAC	BOF 9'-6" AFF	UNIVERSAL INPUT VOLTAGE
WP	LED WALL PACK, LOW PROFILE, BRONZE, ALUMINUM HOUSING, GLASS PRISMATIC LENS	HALCO	LPWP-2-HLS-CS-U-BZ	4000K LED	9800	70	120VAC	BOF 10'-0" AFF	UNIVERSAL INPUT VOLTAGE CS: COLOR SELECTABLE
LIGHTING FIXTURE ACCESSORIES									
SP	SWIVELPOLE, 10', BASE MOUNTED, 316 STAINLESS STEEL	SWIVELPOLE	ST7-M2-2400-T-NCT-SS					SURFACE OR BRACKET	STRUCTURE MOUNTED, INDEPENDENT OF GUARDRAIL.
MB	MOUNTING BRACKET FOR SWIVELPOLE	SWIVELPOLE	MBK9-002-HG					SWIVELPOLE BASE	
TM	ROUND POLE MOUNT TENON FOR SWIVELPOLE, 1/2" KNUCKLE SLIPFITTER, , DARK BRONZE	LBS LIGHTING	WSD-TAD2.5-1/2-D					TOP OF SWIVELPOLE	TENON MOUNT FOR USE WITH TYPE FL FLOODLIGHT
BM	WEATHERPROOF BOX WITH 1/2" THREADED HOLE(S) FOR KNUCKLE MOUNTED FIXTURE	BY CONTRACTOR	TBD					BOF 10'-0" AFF	BOX MOUNT FOR USE WITH TYPE FL FLOODLIGHT

LIGHTING AND POWER PLAN SYMBOLS

LIGHTING FIXTURES:

- (LS) a — 4' LED LINEAR STRIP
- (4L) b — 2'x4' LED LIGHT FIXTURE
- (DL) c d — DOWN LIGHT FIXTURE
- (FL) e f — FLOOD LIGHT FIXTURE
- (PL) a — POLE MOUNTED LIGHT FIXTURE
- (WP) b — WALLPACK LIGHT FIXTURE

NOTE:
UPPER CASE LETTERS (LS, FL, WP)
INDICATES FIXTURE TYPE.
(SEE LIGHTING FIXTURE SCHEDULE)
LOWER CASE LETTER (a, b)
INDICATES SWITCHING CIRCUIT.

SWITCHES:

S_b
S
S_2
S_3
S_4
S_D
S_{HR}
S_K
S_{LV}
S_{OS}
S_P
S_{WP}
S_{XP}

TOGGLE SWITCH - AS SPECIFIED:

LOWER CASE LETTER INDICATES
SWITCHING CIRCUIT

BLANK	SINGLE POLE SWITCH
2	DOUBLE POLE SWITCH
3	3-WAY SWITCH
4	4-WAY SWITCH
D	DIMMER SWITCH
HR	HORSEPOWER RATED SWITCH
K	KEY OPERATED SWITCH
LV	LOW VOLTAGE SWITCH
OS	OCCUPANCY SWITCH
P	SINGLE POLE SWITCH WITH PILOT LAMP
WP	WEATHER PROOF SWITCH
XP	EXPLOSION PROOF SWITCH

PC — CONTROL DEVICE OR EQUIPMENT
LC LIGHTING CONTACTOR
PC PHOTOCELL

RECEPTACLES:

- SINGLE RECEPTACLE. NEMA 5-20R
- DUPLEX RECEPTACLE. NEMA 5-20R
- QUAD RECEPTACLE. NEMA 5-20R
- DUPLEX GFCI RECEPTACLE. NEMA 5-20R
- QUAD GFCI RECEPTACLE. NEMA 5-20R
- DUPLEX RECEPTACLE. NEMA 5-20R FLUSH FLOOR MOUNTED
- QUAD RECEPTACLE. NEMA 5-20R FLUSH FLOOR MOUNTED
- DUPLEX RECEPTACLE. NEMA 5-20R FLUSH FLOOR MOUNTED WITH PROVISIONS FOR DATA
- SPECIAL RECEPTACLE. NEMA CONFIGURATION AS REQUIRED.

RECEPTACLE - AS SPECIFIED:

WP	WEATHER PROOF
XP	EXPLOSION PROOF
EM	EMERGENCY CIRCUIT

MISC. POWER

- (#) MOTOR, # HORSEPOWER RATING
- ELECTRICAL POWER PANELBOARD, SURFACE MOUNTED
- ELECTRICAL POWER PANELBOARD, FLUSH MOUNTED
- DISCONNECT SWITCH (NF = NON-FUSED)
- MAGNETIC MOTOR STARTER
- COMBINATION MAGNETIC MOTOR STARTER/DISCONNECT
- MS — MANUAL MOTOR STARTER
- WIRELESS ACCESS POINT

EXIT AND EMERGENCY LIGHTING:

EXIT SIGN
CEILING, UNIT OR WALL MOUNTED, AS REQUIRED.
ARROW(S) INDICATES EGRESS DIRECTION.
SHADED AREA INDICATES SIGN FACE.

III / III — TANDEM EMERGENCY LIGHT BATTERY PACK AND EXIT SIGN
ARROW(S) INDICATES EGRESS DIRECTION.
SHADED AREA INDICATES SIGN FACE.
ROMAN NUMERALS FOR REMOTE HEAD REFERENCE.

III — EMERGENCY LIGHT BATTERY PACK
ROMAN NUMERALS FOR REMOTE HEAD REFERENCE

III — REMOTE EMERGENCY LIGHTING HEAD
ROMAN NUMERALS FOR BATTERY PACK POWER REFERENCE

GENERAL NOTES:

1. THE MINIMUM SIZE LIGHTING AND POWER WIRING SHALL BE #12 AWG.
2. ALL INTERIOR DISTRIBUTION AND BRANCH WIRING SHALL BE 600V, COPPER WITH THHN/THWN INSULATION, UNLESS STATED OTHERWISE. ALL EXTERIOR DISTRIBUTION AND BRANCH WIRING SHALL BE 600V, COPPER WITH XHHW INSULATION, UNLESS STATED OTHERWISE.
3. AN EQUIPMENT GROUNDING CONDUCTOR SHALL BE INSTALLED WITH EVERY FEEDER AND BRANCH CIRCUIT.
4. THE NON-HOMERUN CABLES IN A CIRCUIT SHALL MATCH THE SIZE OF THE HOMERUN CABLE FOR THAT CIRCUIT, UNLESS NOTED OTHERWISE. REFER TO THE PANEL SCHEDULES FOR ALL HOMERUN CABLE REQUIREMENTS.
5. ALL CABLES SHALL BE SUPPORTED BY CONDUIT, CABLE TRAY, OR A COMBINATION OF RACEWAYS, FOR THEIR ENTIRE LENGTH. CONDUIT MAY BE USED AS A RACEWAY FOR ANY GROUP OF SINGLE CONDUCTORS OR ANY MULTICONDUCTOR CABLE.
6. ALL LIGHTING TOGGLE SWITCHES SHALL BE COMMERCIAL SPECIFICATION GRADE 277/120V, SIDE WIRED AND PROVIDED WITH GROUNDING SCREW. LEVITON, PASS AND SEYMOUR OR APPROVED EQUAL.
7. ALL CONENIENCE RECEPTACLES SHALL BE INDUSTRIAL GRADE GROUNDING TYPE NEMA 5-20R, SIDE WIRED. LEVITON, PASS AND SEYMOUR OR APPROVED EQUAL. ALL CONVENIENCE RECEPTACLES TO BE INSTALLED ON THE PLANT FLOOR, IN ELECTRICAL ROOMS OR ON AUXILIARY STRUCTURES ON THE SITE SHALL BE GFCI PROTECTED.
8. ALL CONVENIENCE RECEPTACLES SHALL BE MOUNTED 18" AFF, ALL LAVATORY GFCI RECEPTACLES SHALL BE MOUNTED AT 48" AFF, ALL LIGHTING TOGGLE SWITCHES SHALL BE MOUNTED AT 48" AFF AND ALL TEL/DATA SYSTEM OUTLETS SHALL BE MOUNTED AT 18" AFF, UNLESS STATED OTHERWISE.
9. COORDINATE THE COLOR OF ALL WIRING DEVICES WITH THE OWNER. PROVIDE MATCHING WALL PLATES FOR ALL WIRING DEVICES IN FINISHED AREAS. PROVIDE STAINLESS STEEL WALL PLATES FOR ALL WIRING DEVICES IN UNFINISHED AREAS.
10. THE MOUNTING HEIGHTS INDICATED FOR ALL LIGHTING FIXTURES SHALL BE TO THE BOTTOM OF FIXTURE (BOF), UNLESS STATED OTHERWISE.
11. ACTUAL LIGHTING FIXTURE LOCATIONS AND MOUNTING HEIGHTS MAY BE ADJUSTED IN THE FIELD TO AVOID PIPING, HANGERS AND OTHER ARCHITECTURAL APPURTENANCES.
12. THE CONTRACTOR SHALL PROVIDE ALL MOUNTING APPURTENANCES AS REQUIRED FOR A COMPLETE INSTALLATION.
13. ALL EMERGENCY LIGHTING FIXTURES AND EXIT SIGNS SHALL BE FED FROM THE UNSWITCHED HOT LEG OF THE ROOM OR AREA LIGHTING CIRCUIT.
14. SEE GENERAL NOTES ON DRAWING EE-CJ-009 FOR MORE INFORMATION.

REVISION

REV	DATE	DR	CK	AP	DESCRIPTION
0	03/28/2025	SAM	CMM	CMH	ISSUED FOR CONSTRUCTION

"Engineering with Distinction"
ECI ELECTRICAL CONSULTANTS, INC.

THIS DRAWING IS THE PROPERTY OF ELECTRICAL CONSULTANTS, INC. AND IS TO BE USED ONLY FOR THE SPECIFIC PROJECT IDENTIFIED ON THE DRAWING. NO REVISIONS SHALL BE MADE WITHOUT THE EXPRESSED WRITTEN CONSENT OF ELECTRICAL CONSULTANTS, INC.

DRAWN BY: SAM	DATE: 08/22/2024	WOODLAND PULP, LLC WOODLAND FISH LIFT PASSAGE	
CHECKED BY: CMM	DATE: 08/22/2024	LIGHTING AND POWER LEGEND SHEET FISH LIFT PASSAGE	
APPROVED BY: CMH	DATE: 08/22/2024	TECHNOLOGY: HYDRO	DRAWING CATEGORY: LAYOUTS
SCALE: NONE	PROJECT NO.: ARL-007	DWG: EE-CB-000	REV: 0

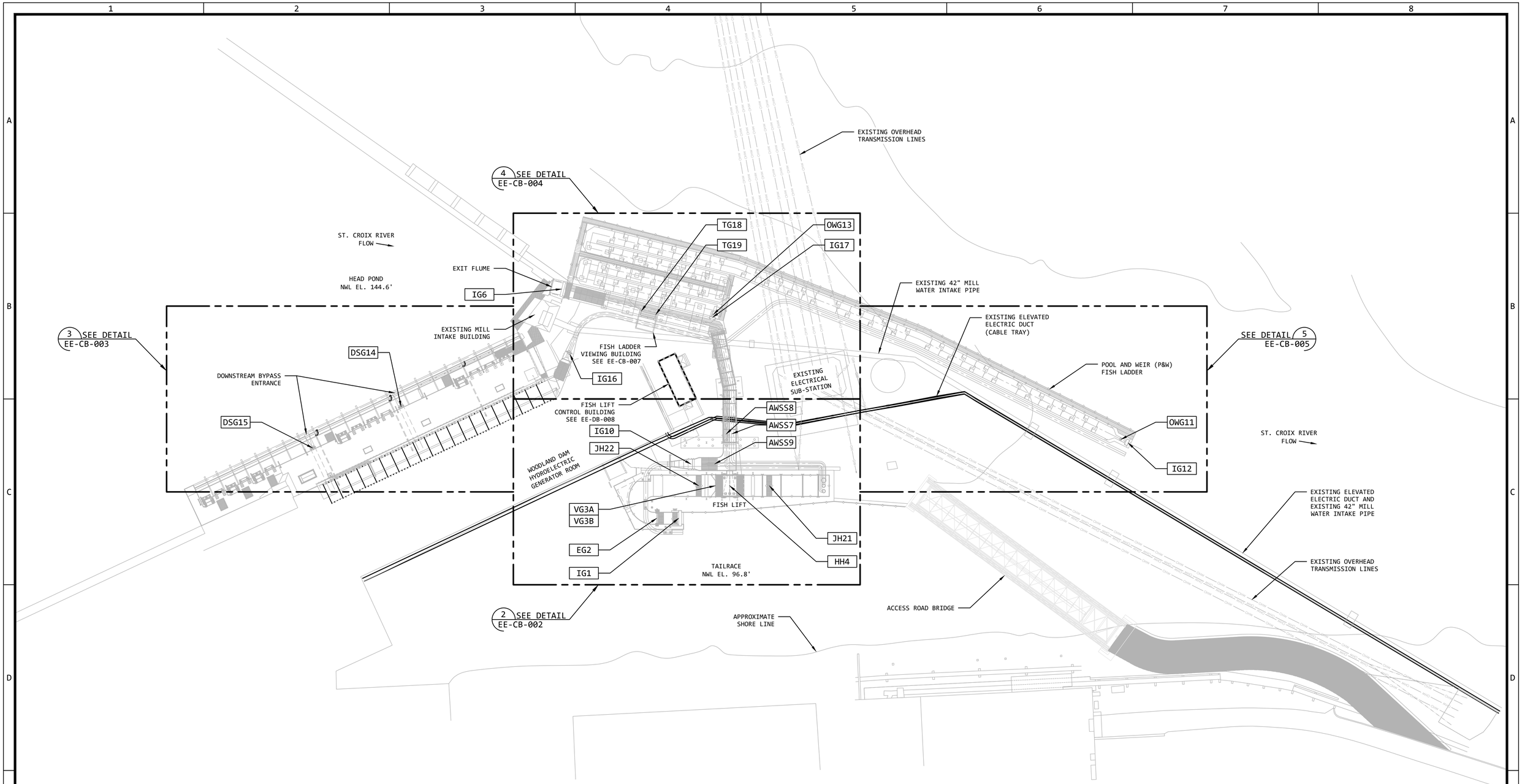

LIGHTING AND POWER PLAN - FISH LIFT PASSAGE SITE (1)

NOTE: SEE DRAWINGS C-010, M-001 & S-003

SCALE: 1" = 30' (--)

N

30' 0 30' 60'

BAR SCALE
1" = 30'
CHECK GRAPHIC SCALE BEFORE USING

REVISION					
REV	DATE	DR	CK	AP	DESCRIPTION
0	03/28/2025	SAM	CMM	CMH	ISSUED FOR CONSTRUCTION

"Engineering with Distinction"
ELECTRICAL CONSULTANTS, INC.

THIS DRAWING IS THE PROPERTY OF ELECTRICAL CONSULTANTS, INC. AND IS TO BE USED ONLY FOR THE SPECIFIC PROJECT IDENTIFIED ON THE DRAWING. NO REVISIONS SHALL BE MADE WITHOUT THE EXPRESSED WRITTEN CONSENT OF ELECTRICAL CONSULTANTS, INC.

DRAWN BY: SAM	DATE: 08/22/2024	WOODLAND PULP, LLC WOODLAND FISH LIFT PASSAGE	
CHECKED BY: CMM	DATE: 08/22/2024	LIGHTING AND POWER PLAN FISH LIFT PASSAGE SITE	
APPROVED BY: CMH	DATE: 08/22/2024	TECHNOLOGY: HYDRO	DRAWING CATEGORY: LAYOUTS
SCALE: AS NOTED	PROJECT NO.: ARL-007	DWG: EE-CB-001	REV: 0

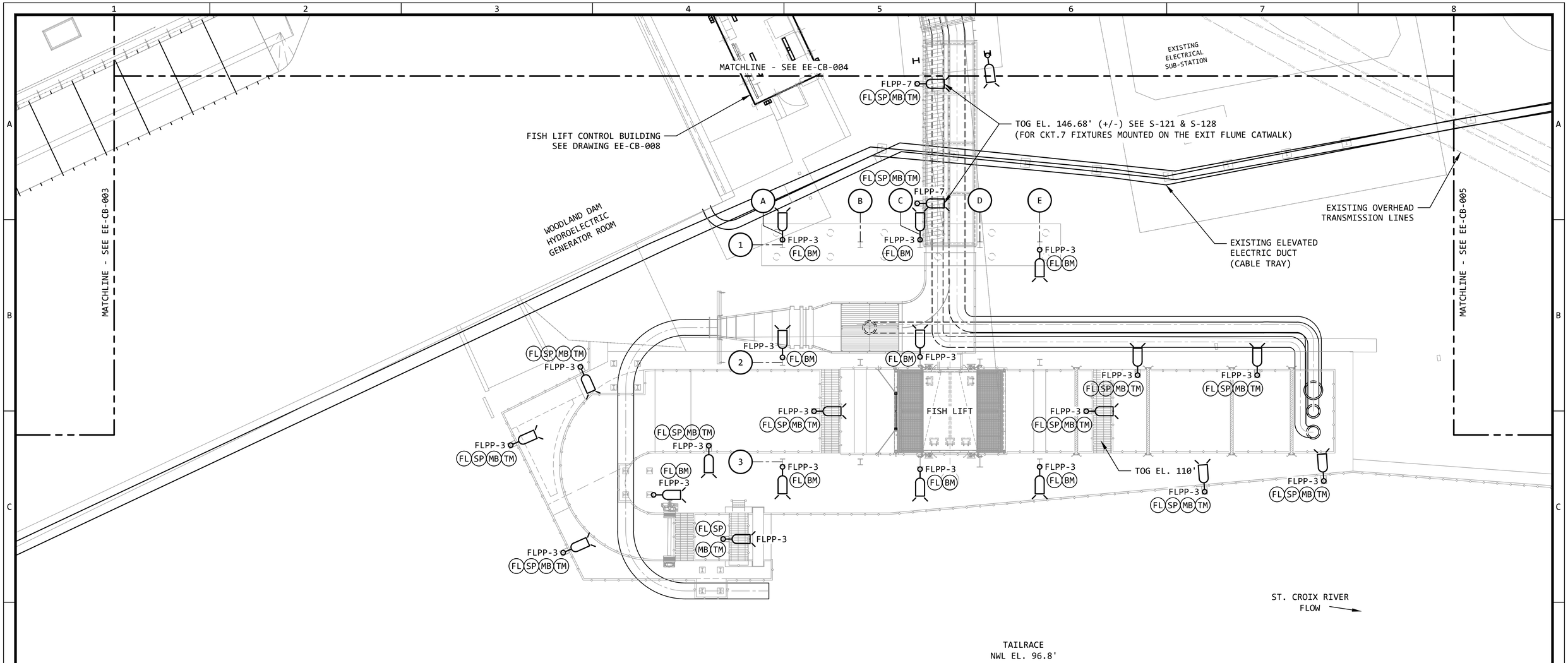

LIGHTING AND POWER PLAN - FISH LIFT AREA (2)

NOTE: SEE DRAWINGS C-100, S-100, S-200 & S-210

SCALE: 1/8" = 1'-0" (--)

12' 8' 4' 0 8' 16'

BAR SCALE
1/8" = 1'-0"
CHECK GRAPHIC SCALE BEFORE USING

N

REVISION					
REV	DATE	DR	CK	AP	DESCRIPTION
0	03/28/2025	SAM	CMM	CMH	ISSUED FOR CONSTRUCTION

EGI "Engineering with Distinction"
ELECTRICAL CONSULTANTS, INC.

THIS DRAWING IS THE PROPERTY OF ELECTRICAL CONSULTANTS, INC. AND IS TO BE USED ONLY FOR THE SPECIFIC PROJECT IDENTIFIED ON THE DRAWING. NO REVISIONS SHALL BE MADE WITHOUT THE EXPRESSED WRITTEN CONSENT OF ELECTRICAL CONSULTANTS, INC.

DRAWN BY: SAM	DATE: 08/22/2024	WOODLAND PULP, LLC WOODLAND FISH LIFT PASSAGE
CHECKED BY: CMM	DATE: 08/22/2024	LIGHTING AND POWER PLAN FISH LIFT AREA
APPROVED BY: CMH	DATE: 08/22/2024	TECHNOLOGY: HYDRO / DRAWING CATEGORY: LAYOUTS
SCALE: AS NOTED	PROJECT NO.: ARL-007	DWG: EE-CB-002 / REV: 0

KEYED NOTES:

1. THE LOCATION FOR THE SWITCH FOR LIGHTING CIRCUIT 11 IS YET TO BE DETERMINED.

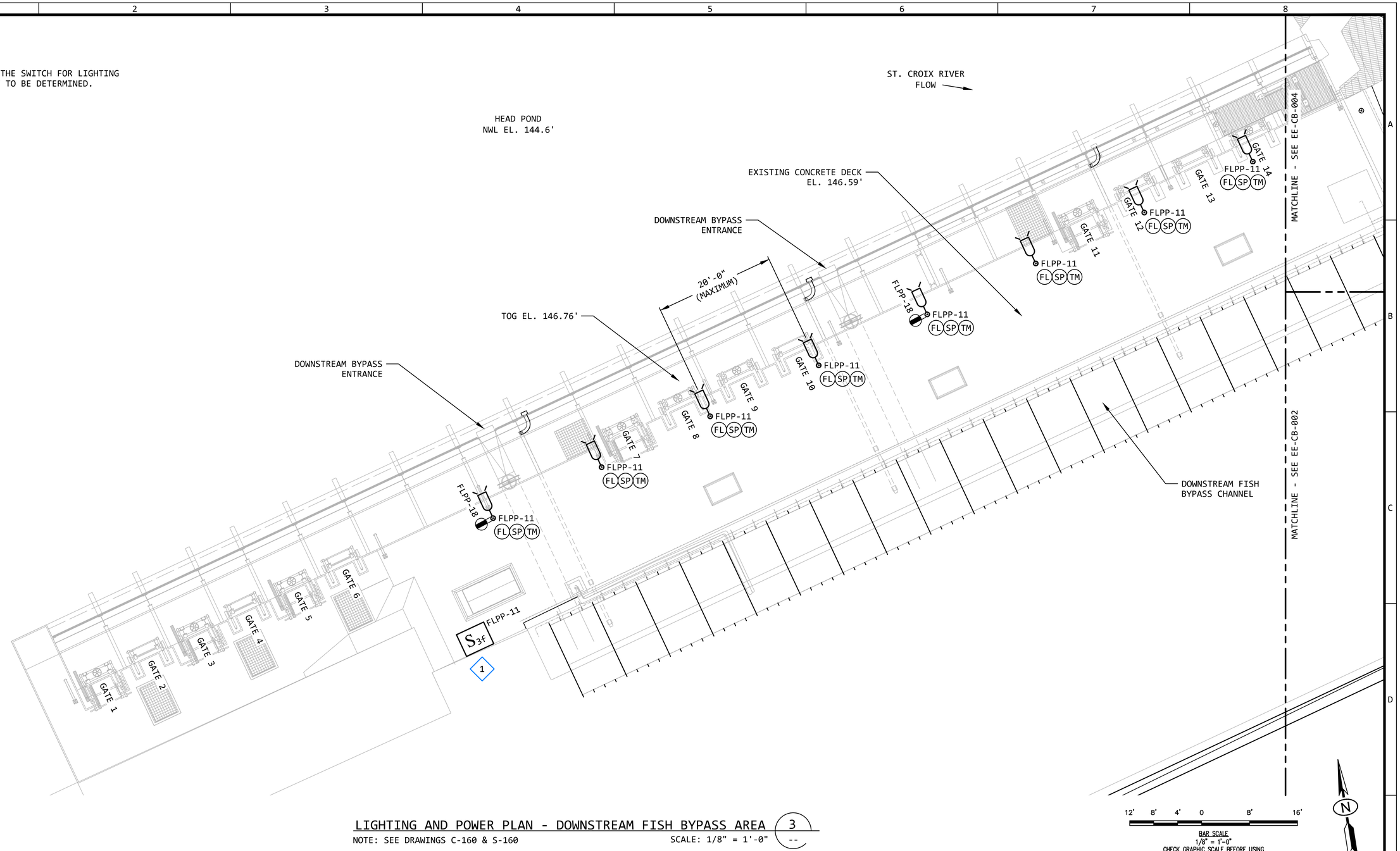

LIGHTING AND POWER PLAN - DOWNSTREAM FISH BYPASS AREA (3)

NOTE: SEE DRAWINGS C-160 & S-160

SCALE: 1/8" = 1'-0" (--)

REVISION

REV	DATE	DR	CK	AP	DESCRIPTION
0	03/28/2025	SAM	CMM	CMH	ISSUED FOR CONSTRUCTION

"Engineering with Distinction"
ELECTRICAL CONSULTANTS, INC.

THIS DRAWING IS THE PROPERTY OF ELECTRICAL CONSULTANTS, INC. AND IS TO BE USED ONLY FOR THE SPECIFIC PROJECT IDENTIFIED ON THE DRAWING. NO REVISIONS SHALL BE MADE WITHOUT THE EXPRESSED WRITTEN CONSENT OF ELECTRICAL CONSULTANTS, INC.

DRAWN BY: SAM	DATE: 08/22/2024	WOODLAND PULP, LLC WOODLAND FISH LIFT PASSAGE
CHECKED BY: CMM	DATE: 08/22/2024	LIGHTING AND POWER PLAN DOWNSTREAM FISH BYPASS AREA
APPROVED BY: CMH	DATE: 08/22/2024	TECHNOLOGY: HYDRO / DRAWING CATEGORY: LAYOUTS
SCALE: AS NOTED	PROJECT NO.: ARL-007	DWG: EE-CB-003 / REV: 0

KEYED NOTES:

1. THE LOCATION FOR THE SWITCHES FOR LIGHTING CIRCUITS 7 AND 11 IS YET TO BE DETERMINED.

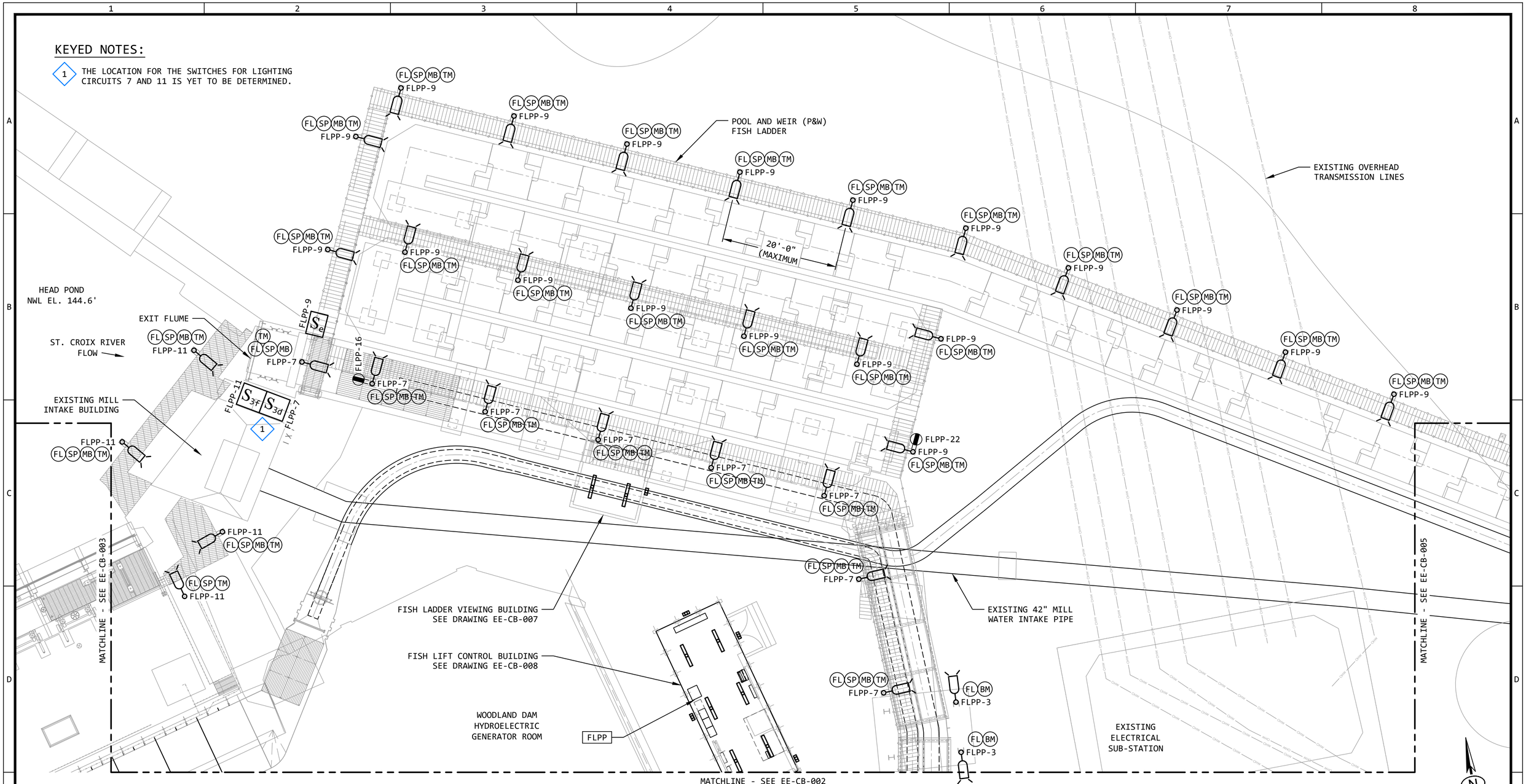

LIGHTING AND POWER PLAN - EXIT FLUME AND FISH LADDER AREAS (4)

NOTE: SEE DRAWINGS C-120, C-140, S-120 & S-140

SCALE: 1/8" = 1'-0" --

12' 8' 4' 0 8' 16'

BAR SCALE
1/8" = 1'-0"
CHECK GRAPHIC SCALE BEFORE USING

N

REVISION

REV	DATE	DR	CK	AP	DESCRIPTION
0	03/28/2025	SAM	CMM	CMH	ISSUED FOR CONSTRUCTION

ECI "Engineering with Distinction"
ELECTRICAL CONSULTANTS, INC.

THIS DRAWING IS THE PROPERTY OF ELECTRICAL CONSULTANTS, INC. AND IS TO BE USED ONLY FOR THE SPECIFIC PROJECT IDENTIFIED ON THE DRAWING. NO REVISIONS SHALL BE MADE WITHOUT THE EXPRESSED WRITTEN CONSENT OF ELECTRICAL CONSULTANTS, INC.

DRAWN BY: SAM	DATE: 08/22/2024	WOODLAND PULP, LLC WOODLAND FISH LIFT PASSAGE
CHECKED BY: CMM	DATE: 08/22/2024	LIGHTING AND POWER PLAN EXIT FLUME AND FISH LADDER AREAS
APPROVED BY: CMH	DATE: 08/22/2024	TECHNOLOGY: HYDRO / DRAWING CATEGORY: LAYOUTS
SCALE: AS NOTED	PROJECT NO.: ARL-007	DWG: EE-CB-004 / REV: 0

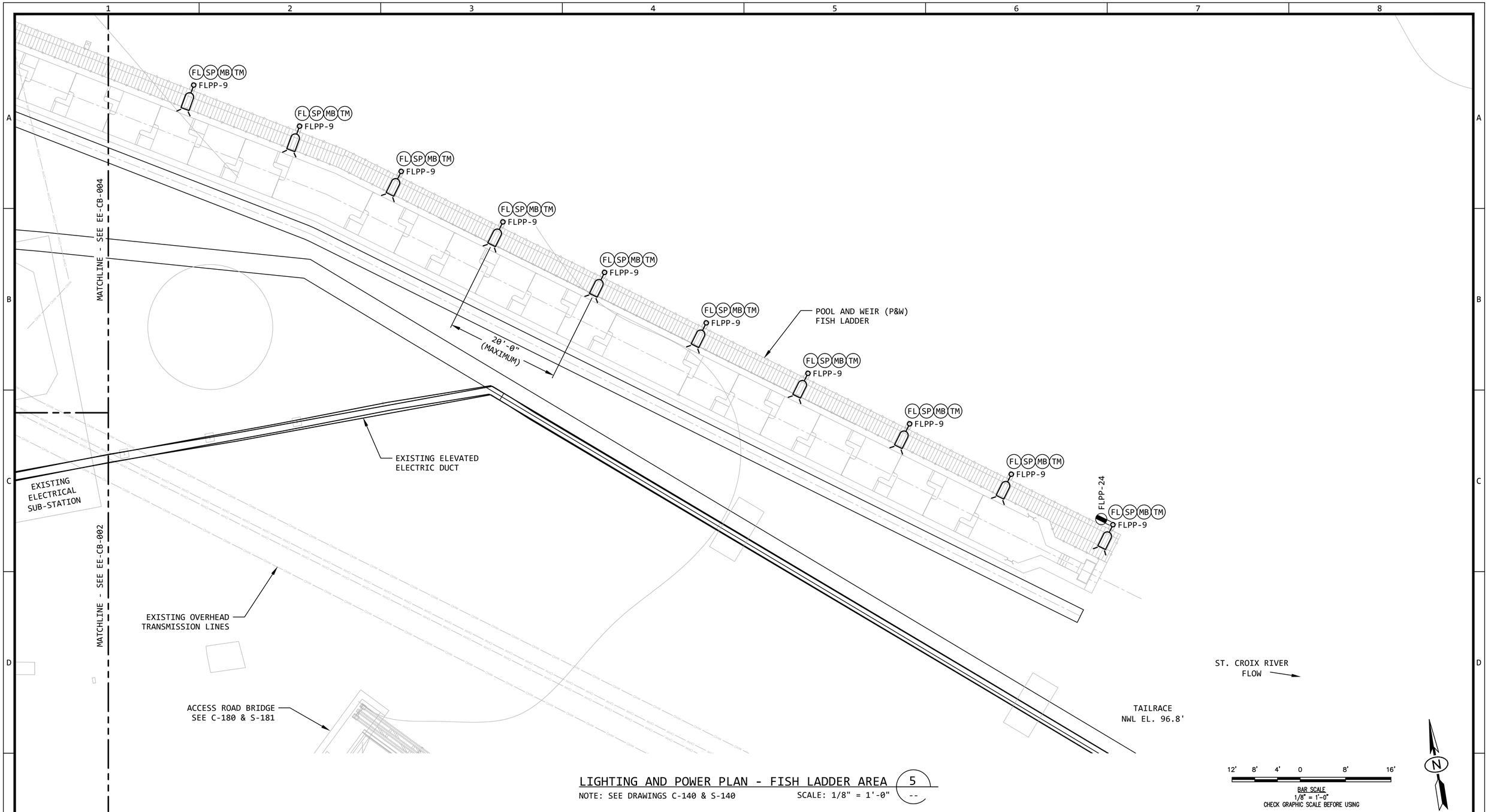

LIGHTING AND POWER PLAN - FISH LADDER AREA (5)

NOTE: SEE DRAWINGS C-140 & S-140 SCALE: 1/8" = 1'-0"

REVISION					
REV	DATE	DR	CK	AP	DESCRIPTION
0	03/28/2025	SAM	CMM	CMH	ISSUED FOR CONSTRUCTION

"Engineering with Distinction"
ELECTRICAL CONSULTANTS, INC.

THIS DRAWING IS THE PROPERTY OF ELECTRICAL CONSULTANTS, INC. AND IS TO BE USED ONLY FOR THE SPECIFIC PROJECT IDENTIFIED ON THE DRAWING. NO REVISIONS SHALL BE MADE WITHOUT THE EXPRESSED WRITTEN CONSENT OF ELECTRICAL CONSULTANTS, INC.

DRAWN BY: SAM	DATE: 08/22/2024	WOODLAND PULP, LLC WOODLAND FISH LIFT PASSAGE
CHECKED BY: CMM	DATE: 08/22/2024	LIGHTING AND POWER PLAN FISH LADDER AREA (EAST)
APPROVED BY: CMH	DATE: 08/22/2024	TECHNOLOGY: HYDRO / DRAWING CATEGORY: LAYOUTS
SCALE: AS NOTED	PROJECT NO.: ARL-007	DWG: EE-CB-005 / REV: 0

3' 2' 1' 0 2' 4'

BAR SCALE
1/2" = 1'-0"
CHECK GRAPHIC SCALE BEFORE USING

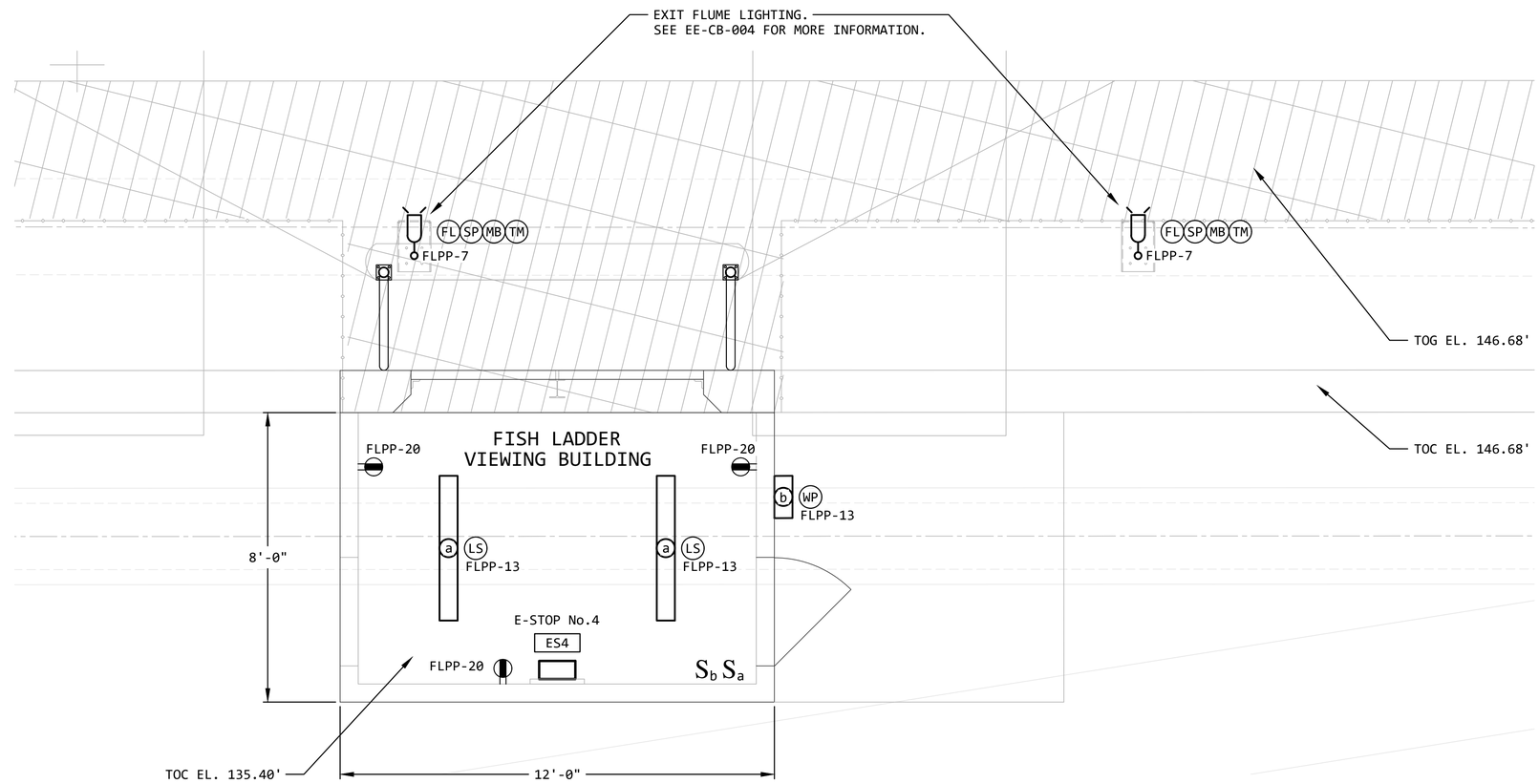

LIGHTING AND POWER PLAN - FISH LADDER VIEWING BUILDING (7)

NOTE: SEE DRAWING C-123 & S-120

SCALE: 1/2" = 1'-0" (--)

REVISION					
REV	DATE	DR	CK	AP	DESCRIPTION
0	03/28/2025	SAM	CMM	CMH	ISSUED FOR CONSTRUCTION

"Engineering with Distinction"
ECI
ELECTRICAL CONSULTANTS, INC.

THIS DRAWING IS THE PROPERTY OF ELECTRICAL CONSULTANTS, INC. AND IS TO BE USED ONLY FOR THE SPECIFIC PROJECT IDENTIFIED ON THE DRAWING. NO REVISIONS SHALL BE MADE WITHOUT THE EXPRESSED WRITTEN CONSENT OF ELECTRICAL CONSULTANTS, INC.

DRAWN BY: SAM	DATE: 08/22/2024	WOODLAND PULP, LLC WOODLAND FISH LIFT PASSAGE
CHECKED BY: CMM	DATE: 08/22/2024	LIGHTING AND POWER PLAN FISH LADDER VIEWING BUILDING
APPROVED BY: CMH	DATE: 08/22/2024	TECHNOLOGY: HYDRO / DRAWING CATEGORY: LAYOUTS
SCALE: AS NOTED	PROJECT NO.: ARL-007	DWG: EE-CB-007 / REV: 0

3' 2' 1' 0 2' 4'

BAR SCALE
1/2" = 1'-0"
CHECK GRAPHIC SCALE BEFORE USING

EQUIPMENT SCHEDULE

FLPP FISH LIFT POWER PANEL

(SEE EE-CA-008 FOR MORE INFORMATION)

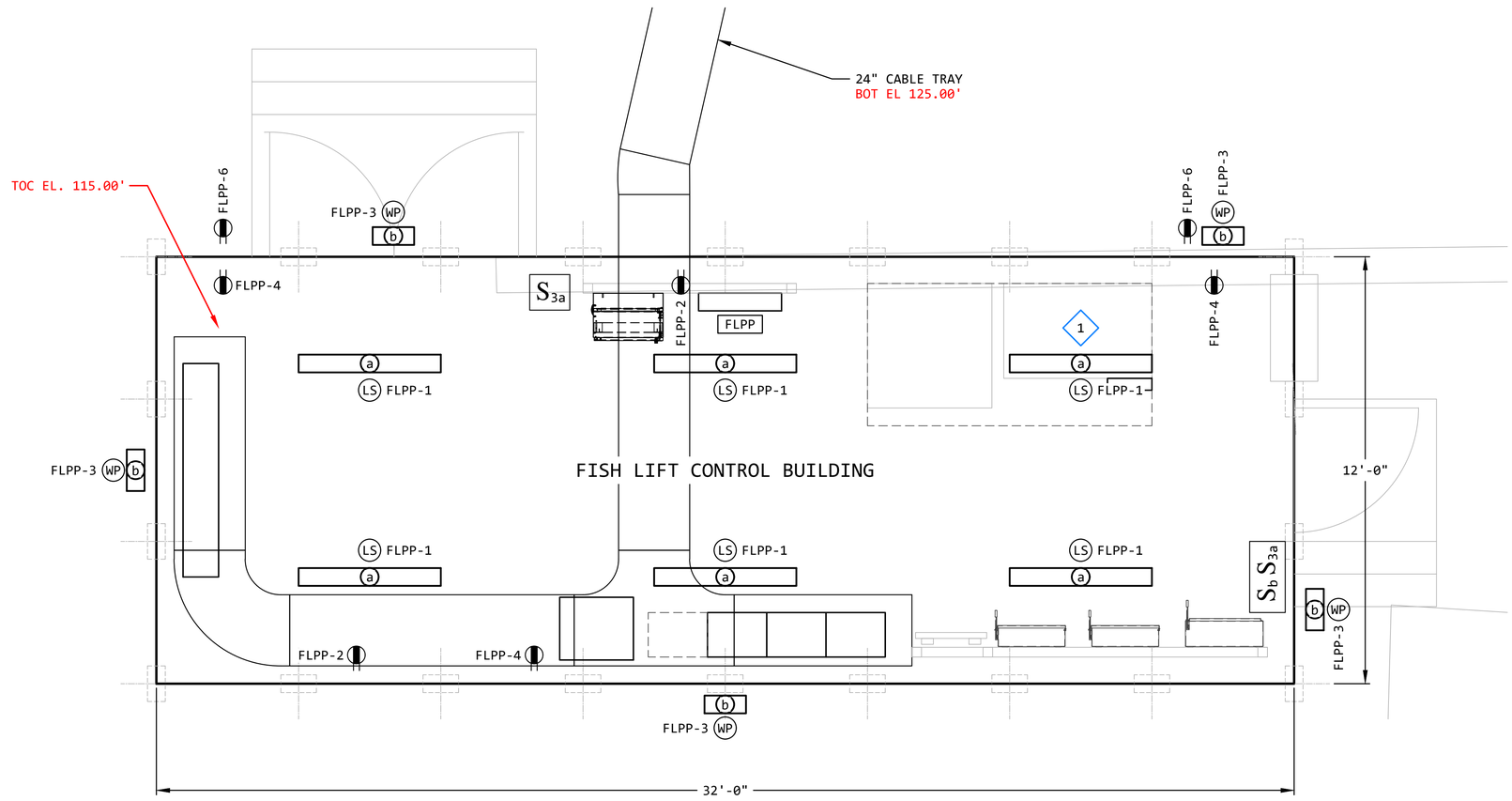

LIGHTING AND POWER PLAN - FISH LIFT CONTROL BUILDING (8 / --)

NOTE: SEE DRAWING S-190

SCALE: 1/2" = 1'-0"

KEYED NOTES:

1. FOR THE LIGHTING FIXTURE OVER THE AIR BURST SYSTEM: THE LIGHTING FIXTURE LOCATION AND MOUNTING HEIGHT MAY BE ADJUSTED IN THE FIELD TO AVOID PIPING, HANGERS AND OTHER ARCHITECTURAL APPURTENANCES.

REVISION

REV	DATE	DR	CK	AP	DESCRIPTION
0	03/28/2025	SAM	CMM	CMH	ISSUED FOR CONSTRUCTION

"Engineering with Distinction"
ECI ELECTRICAL CONSULTANTS, INC.

THIS DRAWING IS THE PROPERTY OF ELECTRICAL CONSULTANTS, INC. AND IS TO BE USED ONLY FOR THE SPECIFIC PROJECT IDENTIFIED ON THE DRAWING. NO REVISIONS SHALL BE MADE WITHOUT THE EXPRESSED WRITTEN CONSENT OF ELECTRICAL CONSULTANTS, INC.

DRAWN BY: SAM	DATE: 08/22/2024	WOODLAND PULP, LLC WOODLAND FISH LIFT PASSAGE
CHECKED BY: CMM	DATE: 08/22/2024	LIGHTING AND POWER PLAN FISH LIFT CONTROL BUILDING
APPROVED BY: CMH	DATE: 08/22/2024	TECHNOLOGY: HYDRO / DRAWING CATEGORY: LAYOUTS
SCALE: AS NOTED	PROJECT NO.: ARL-007	DWG: EE-CB-008 / REV: 0

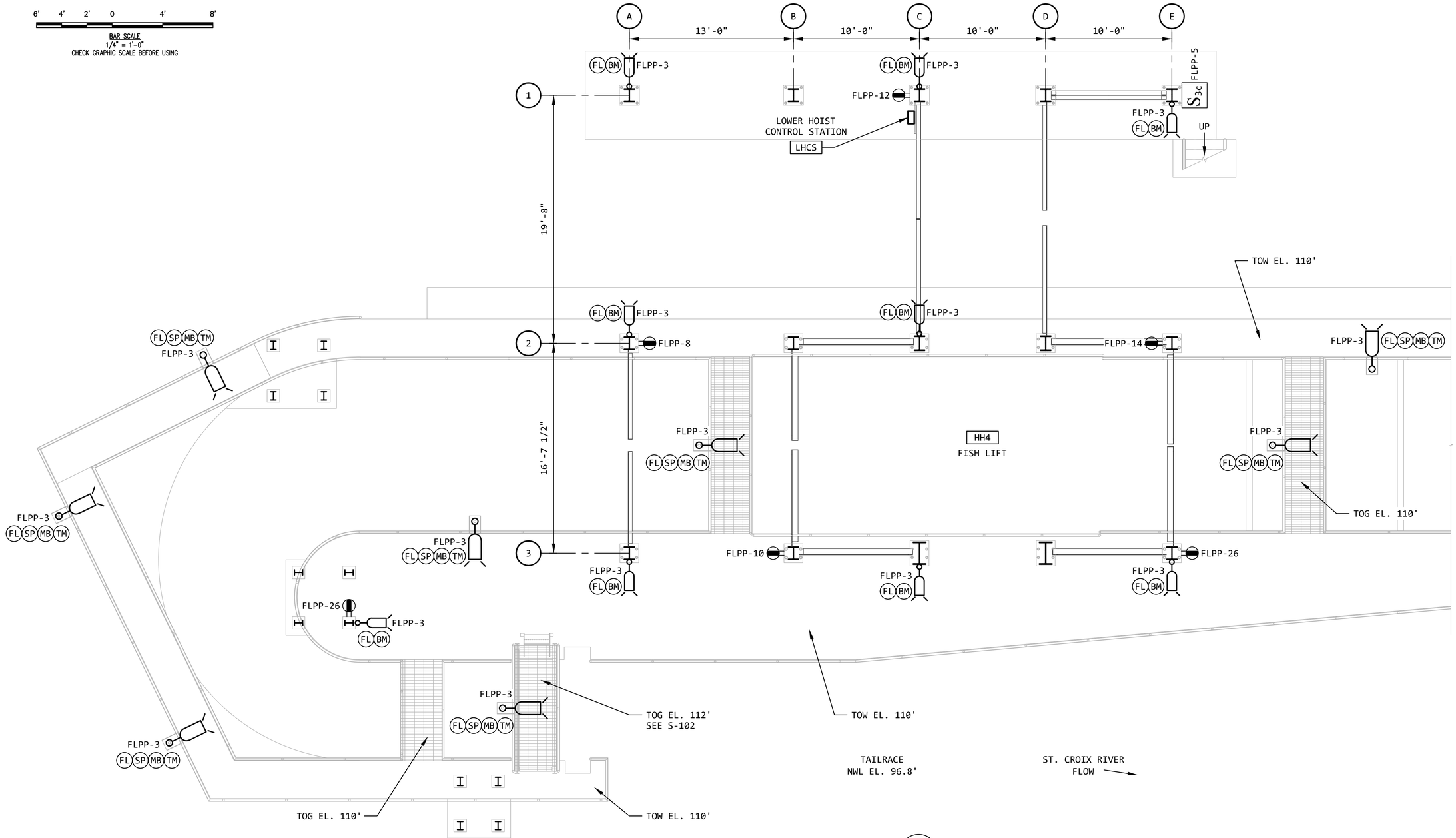

LIGHTING AND RECEPTACLE PLAN - FISH LIFT TOWER - GRADE LEVEL 10

NOTE: SEE DRAWING S-210

SCALE: 1/4" = 1'-0" --

REVISION					
REV	DATE	DR	CK	AP	DESCRIPTION
0	03/28/2025	SAM	CMM	CMH	ISSUED FOR CONSTRUCTION

"Engineering with Distinction"
ELECTRICAL CONSULTANTS, INC.

THIS DRAWING IS THE PROPERTY OF ELECTRICAL CONSULTANTS, INC. AND IS TO BE USED ONLY FOR THE SPECIFIC PROJECT IDENTIFIED ON THE DRAWING. NO REVISIONS SHALL BE MADE WITHOUT THE EXPRESSED WRITTEN CONSENT OF ELECTRICAL CONSULTANTS, INC.

DRAWN BY: SAM	DATE: 08/22/2024	WOODLAND PULP, LLC WOODLAND FISH LIFT PASSAGE
CHECKED BY: CMM	DATE: 08/22/2024	LIGHTING AND POWER PLAN FISH LIFT TOWER - GRADE LEVEL
APPROVED BY: CMH	DATE: 08/22/2024	TECHNOLOGY: HYDRO / DRAWING CATEGORY: LAYOUTS
SCALE: AS NOTED	PROJECT NO.: ARL-007	DWG: EE-CB-010 / REV: 0

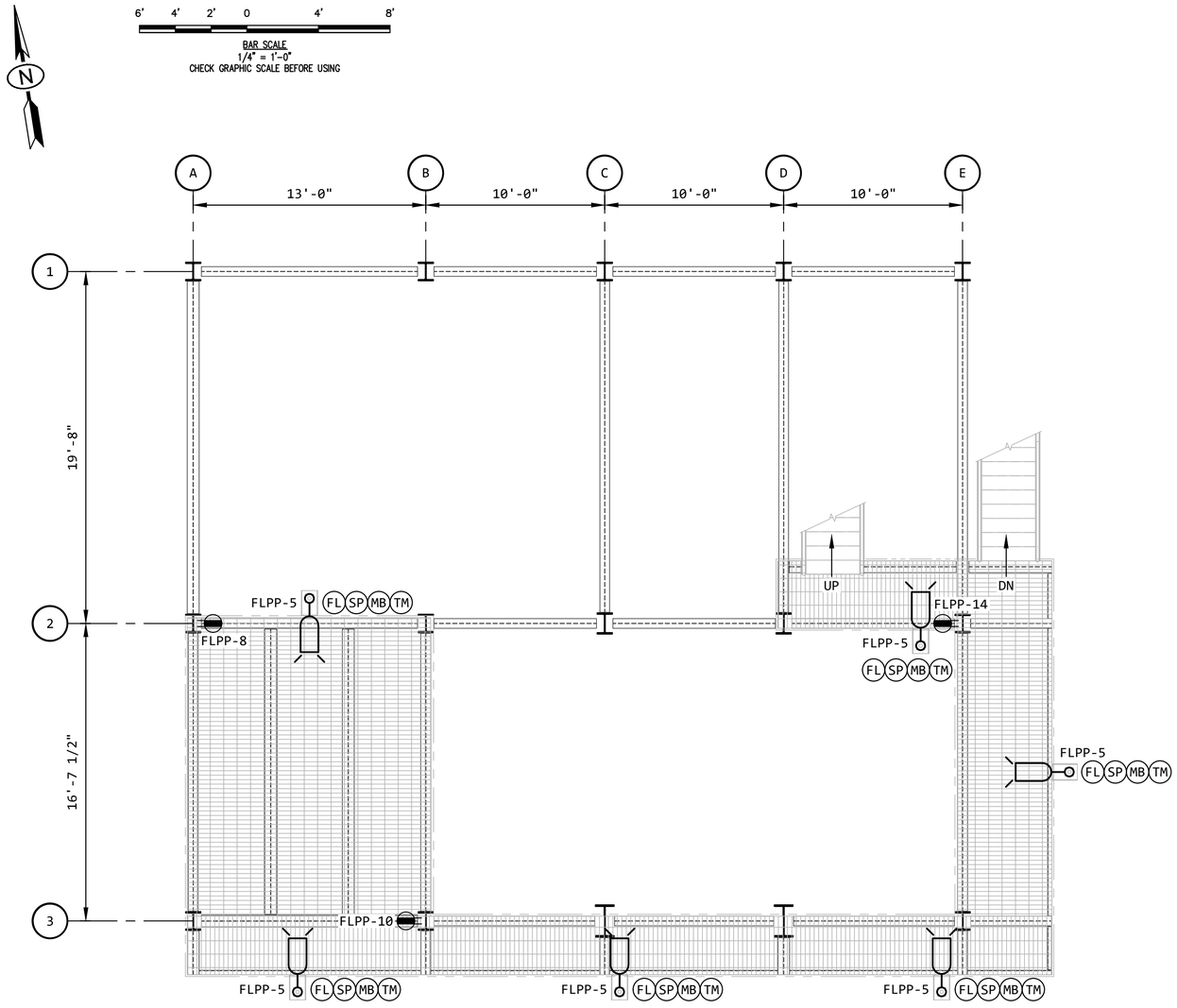

LIGHTING AND RECEPTACLE PLAN - FISH LIFT TOWER (TOS EL 122.00') 11A --

NOTE: SEE DRAWING S-211

SCALE: 1/4" = 1'-0"

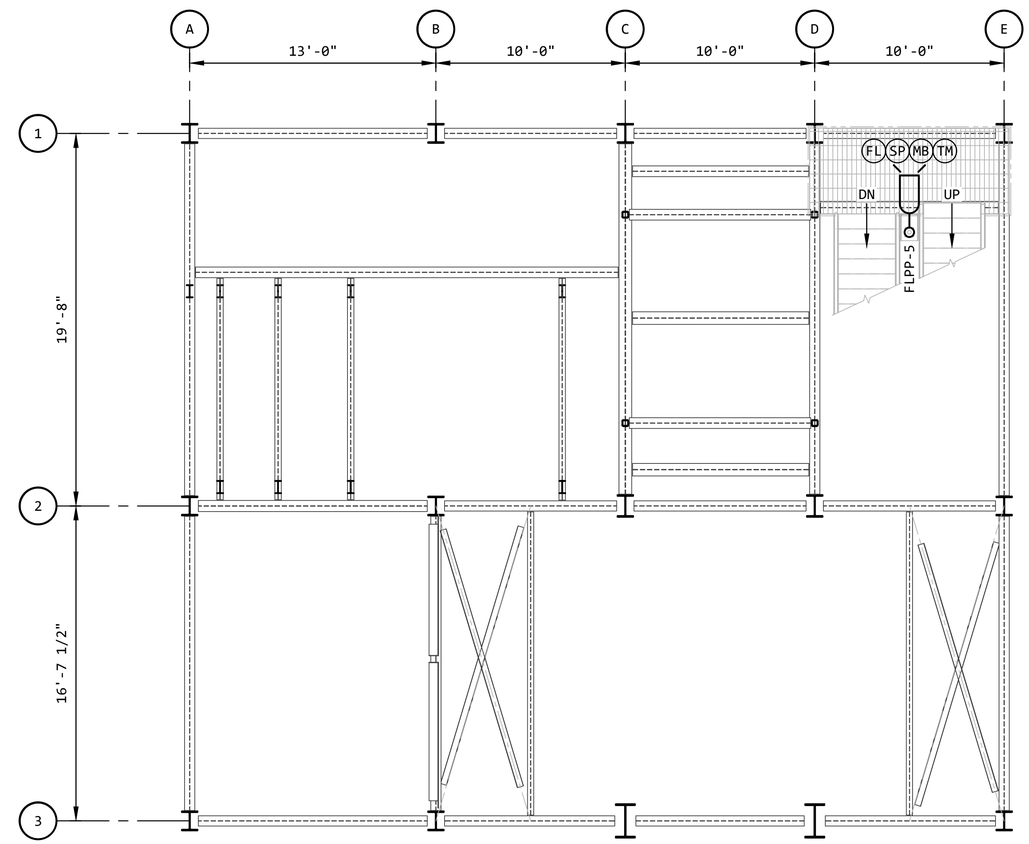

LIGHTING AND RECEPTACLE PLAN - FISH LIFT TOWER (TOS EL 134.00') 11B --

NOTE: SEE DRAWING S-211

SCALE: 1/4" = 1'-0"

REVISION

REV	DATE	DR	CK	AP	DESCRIPTION
0	03/28/2025	SAM	CMM	CMH	ISSUED FOR CONSTRUCTION

ECI "Engineering with Distinction"
ELECTRICAL CONSULTANTS, INC.

THIS DRAWING IS THE PROPERTY OF ELECTRICAL CONSULTANTS, INC. AND IS TO BE USED ONLY FOR THE SPECIFIC PROJECT IDENTIFIED ON THE DRAWING. NO REVISIONS SHALL BE MADE WITHOUT THE EXPRESSED WRITTEN CONSENT OF ELECTRICAL CONSULTANTS, INC.

DRAWN BY: SAM	DATE: 08/22/2024	WOODLAND PULP, LLC WOODLAND FISH LIFT PASSAGE
CHECKED BY: CMM	DATE: 08/22/2024	LIGHTING AND POWER PLAN FISH LIFT TOWER - LOWER LEVELS
APPROVED BY: CMH	DATE: 08/22/2024	TECHNOLOGY: HYDRO / DRAWING CATEGORY: LAYOUTS
SCALE: AS NOTED	PROJECT NO.: ARL-007	DWG: EE-CB-011 / REV: 0

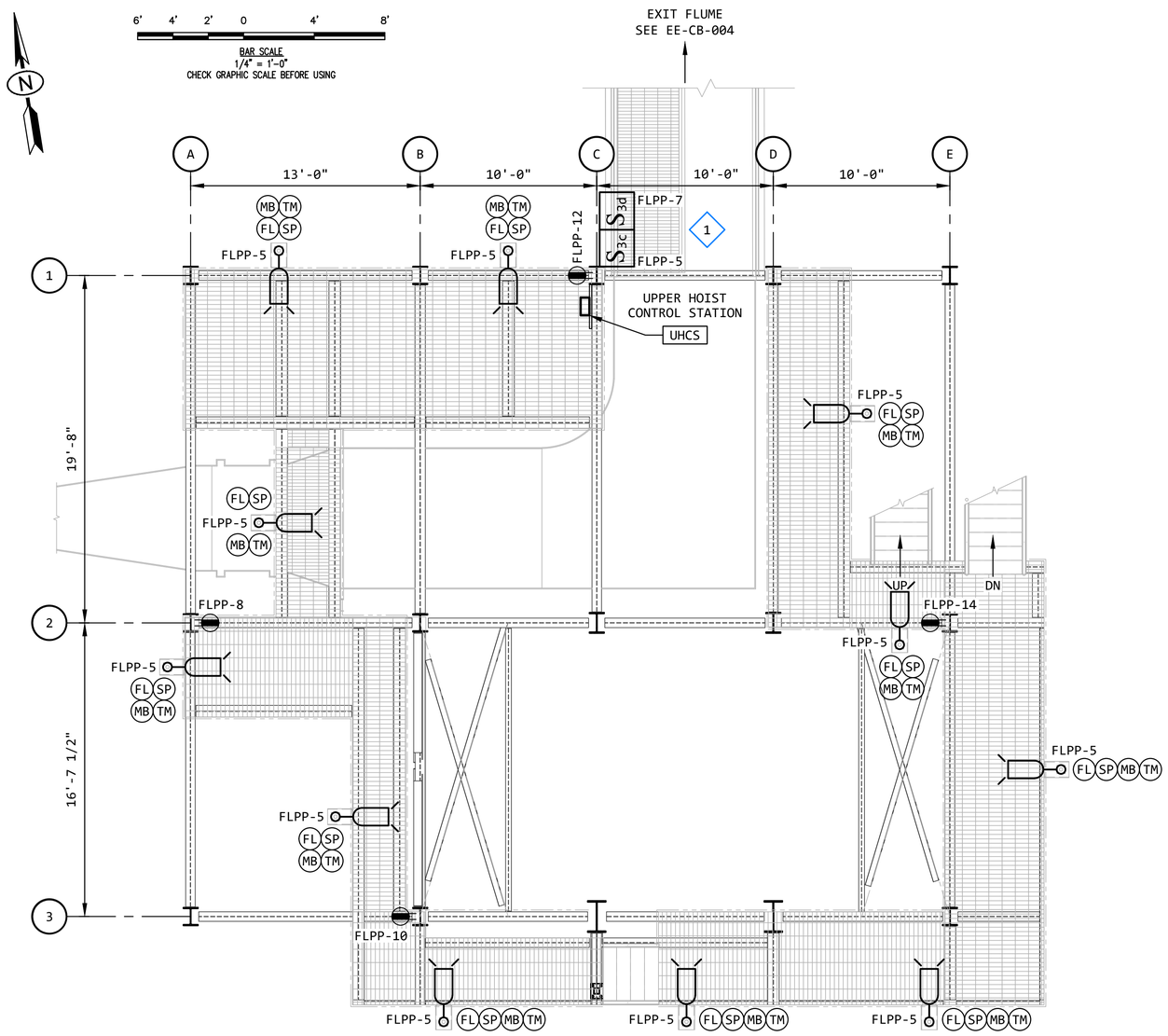

LIGHTING AND RECEPTACLE PLAN - FISH LIFT TOWER (TOS EL 146.00') 12A
NOTE: SEE DRAWING S-212 SCALE: 1/4" = 1'-0" --

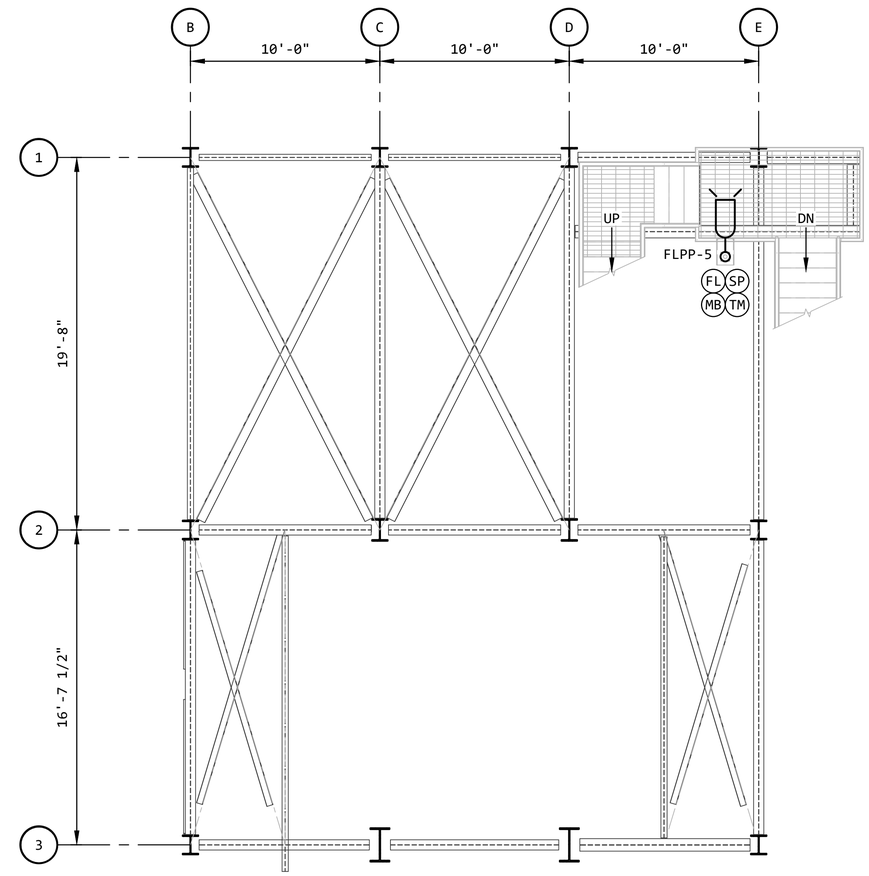

LIGHTING AND RECEPTACLE PLAN - FISH LIFT TOWER (TOS EL 158.00') 12B
NOTE: SEE DRAWING S-212 SCALE: 1/4" = 1'-0" --

KEYED NOTES:

1. THE LOCATION FOR THE SWITCHES FOR LIGHTING CIRCUITS 5 AND 7 IS YET TO BE DETERMINED.

REVISION

REV	DATE	DR	CK	AP	DESCRIPTION
0	03/28/2025	SAM	CMM	CMH	ISSUED FOR CONSTRUCTION

ECI "Engineering with Distinction"
ELECTRICAL CONSULTANTS, INC.

THIS DRAWING IS THE PROPERTY OF ELECTRICAL CONSULTANTS, INC. AND IS TO BE USED ONLY FOR THE SPECIFIC PROJECT IDENTIFIED ON THE DRAWING. NO REVISIONS SHALL BE MADE WITHOUT THE EXPRESSED WRITTEN CONSENT OF ELECTRICAL CONSULTANTS, INC.

DRAWN BY: SAM	DATE: 08/22/2024	WOODLAND PULP, LLC WOODLAND FISH LIFT PASSAGE
CHECKED BY: CMM	DATE: 08/22/2024	LIGHTING AND POWER PLAN FISH LIFT TOWER - MIDDLE LEVELS
APPROVED BY: CMH	DATE: 08/22/2024	TECHNOLOGY: HYDRO / DRAWING CATEGORY: LAYOUTS
SCALE: AS NOTED	PROJECT NO.: ARL-007	DWG: EE-CB-012 / REV: 0

6' 4' 2' 0 4' 8'

BAR SCALE
1/4" = 1'-0"
CHECK GRAPHIC SCALE BEFORE USING

N

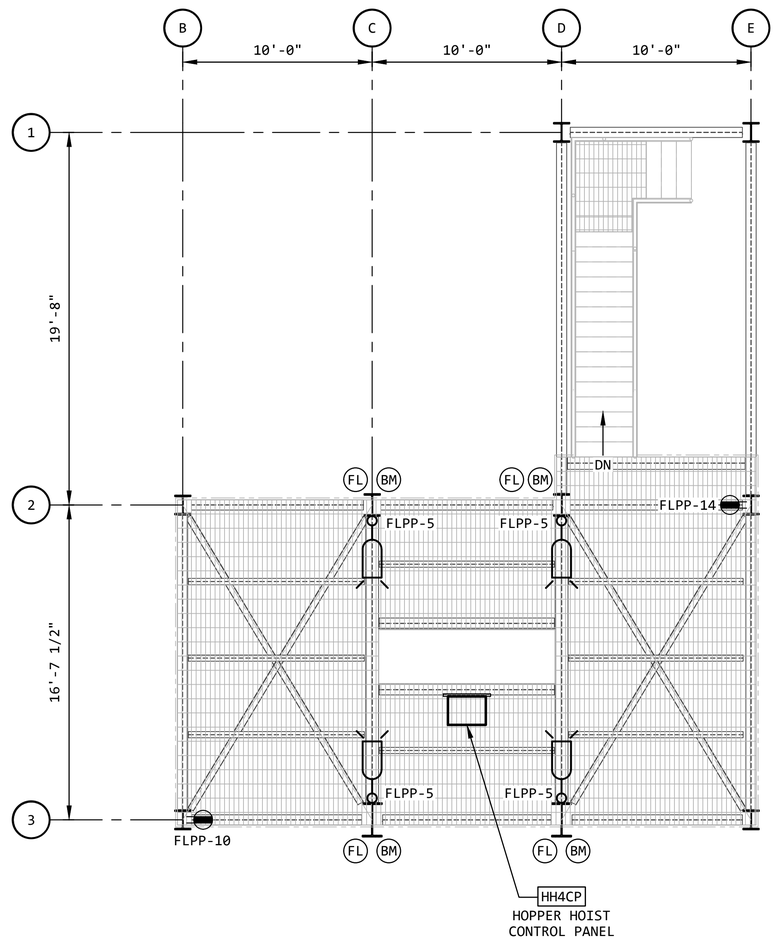

LIGHTING AND RECEPTACLE PLAN - FISH LIFT TOWER (TOS EL 173.00') 13A

NOTE: SEE DRAWING S-213 SCALE: 1/4" = 1'-0" --

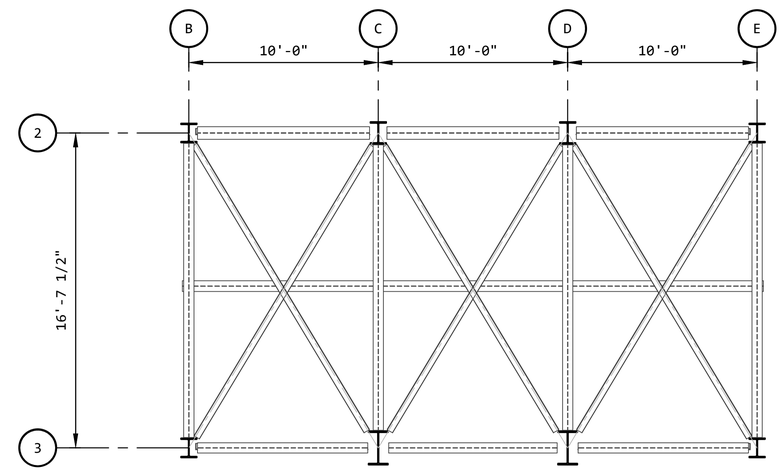

LIGHTING AND RECEPTACLE PLAN - FISH LIFT TOWER (TOS EL 186.00') 13B

NOTE: SEE DRAWING S-213 SCALE: 1/4" = 1'-0" --

REVISION

REV	DATE	DR	CK	AP	DESCRIPTION
0	03/28/2025	SAM	CMM	CMH	ISSUED FOR CONSTRUCTION

"Engineering with Distinction"
ECI
ELECTRICAL CONSULTANTS, INC.

THIS DRAWING IS THE PROPERTY OF ELECTRICAL CONSULTANTS, INC. AND IS TO BE USED ONLY FOR THE SPECIFIC PROJECT IDENTIFIED ON THE DRAWING. NO REVISIONS SHALL BE MADE WITHOUT THE EXPRESSED WRITTEN CONSENT OF ELECTRICAL CONSULTANTS, INC.

DRAWN BY SAM	DATE 08/22/2024	WOODLAND PULP, LLC WOODLAND FISH LIFT PASSAGE	
CHECKED BY CMM	DATE 08/22/2024	LIGHTING AND POWER PLAN FISH LIFT TOWER - UPPER LEVELS	
APPROVED BY CMH	DATE 08/22/2024	TECHNOLOGY HYDRO	DRAWING CATEGORY LAYOUTS
SCALE AS NOTED	PROJECT NO. ARL-007	DWG EE-CB-013	REV 0

EQUIPMENT SCHEDULE

IG1	FISH LIFT ENTRANCE ISOLATION GATE
EG2	FISH LIFT ENTRANCE GATE
VG3A	V-GATE A
VG3B	V-GATE B
HH4	HOPPER HOIST
IG6	EXIT FLUME ISOLATION GATE
AWSS7	AWS US ISOLATION VALVE
AWSS8	DS PASSAGE AWS ISOLATION VALVE
AWSS9	AWS DS ISOLATION VALVE
IG10	EXIT FLUME DS BYPASS ISOLATION GATE
OWG11	P&W ENTRANCE OVERSHOT WEIR GATE
IG12	P&W ENTRANCE ISOLATION GATE
OWG13	P&W EXIT OVERSHOT WEIR GATE
DSG14	DS BYPASS KNIFE GATE VALVE
DSG15	DS BYPASS KNIFE GATE VALVE
IG16	DS BYPASS ISOLATION GATE
IG17	P&W EXIT ISOLATION GATE
TG18	TRAP GATE
TG19	TRAP GATE
JH21	UPSTREAM SCREEN PANEL JIB HOIST
JH22	STATIONARY V-GATE PANEL JIB HOIST
ABSC	AWS SCREEN AIR BURST SYSTEM COMPRESSOR
HVAC	FISH LIFT CONTROL BUILDING PACKAGED HVAC UNIT
FLPP	FISH LIFT POWER PANEL 120A MAIN CB, 30 CIRCUITS
FLPT	FISH LIFT POWER TRANSFORMER 30kVA, 480V - 208/120V

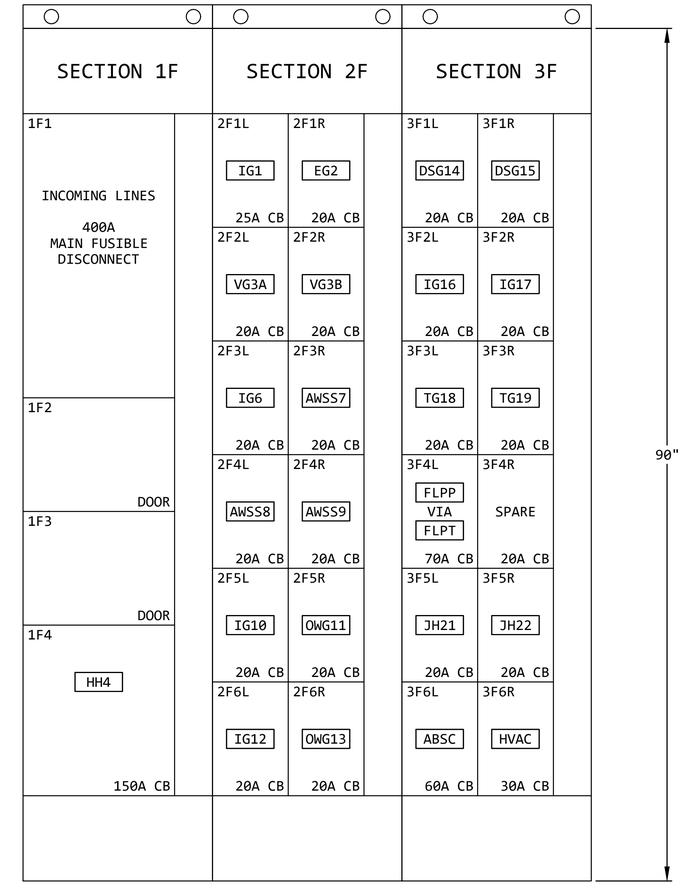

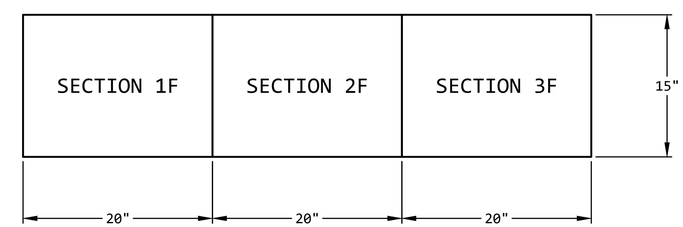

REVISION

REV	DATE	DR	CK	AP	DESCRIPTION
0	03/28/2025	SAM	CMM	CMH	ISSUED FOR CONSTRUCTION

"Engineering with Distinction"
ELECTRICAL CONSULTANTS, INC.

THIS DRAWING IS THE PROPERTY OF ELECTRICAL CONSULTANTS, INC. AND IS TO BE USED ONLY FOR THE SPECIFIC PROJECT IDENTIFIED ON THE DRAWING. NO REVISIONS SHALL BE MADE WITHOUT THE EXPRESSED WRITTEN CONSENT OF ELECTRICAL CONSULTANTS, INC.

DRAWN BY: SAM	DATE: 02/22/2024	WOODLAND PULP, LLC WOODLAND FISH LIFT PASSAGE
CHECKED BY: CMM	DATE: 02/22/2024	EQUIPMENT LAYOUT PLAN - FRONT ELEVATION 480V FISH LIFT MOTOR CONTROL CENTER (FLMCC)
APPROVED BY: CMH	DATE: 02/22/2024	TECHNOLOGY: HYDRO / DRAWING CATEGORY: LAYOUTS
SCALE: NONE	PROJECT NO.: ARL-007	DWG: EE-CE-001 / REV: 0

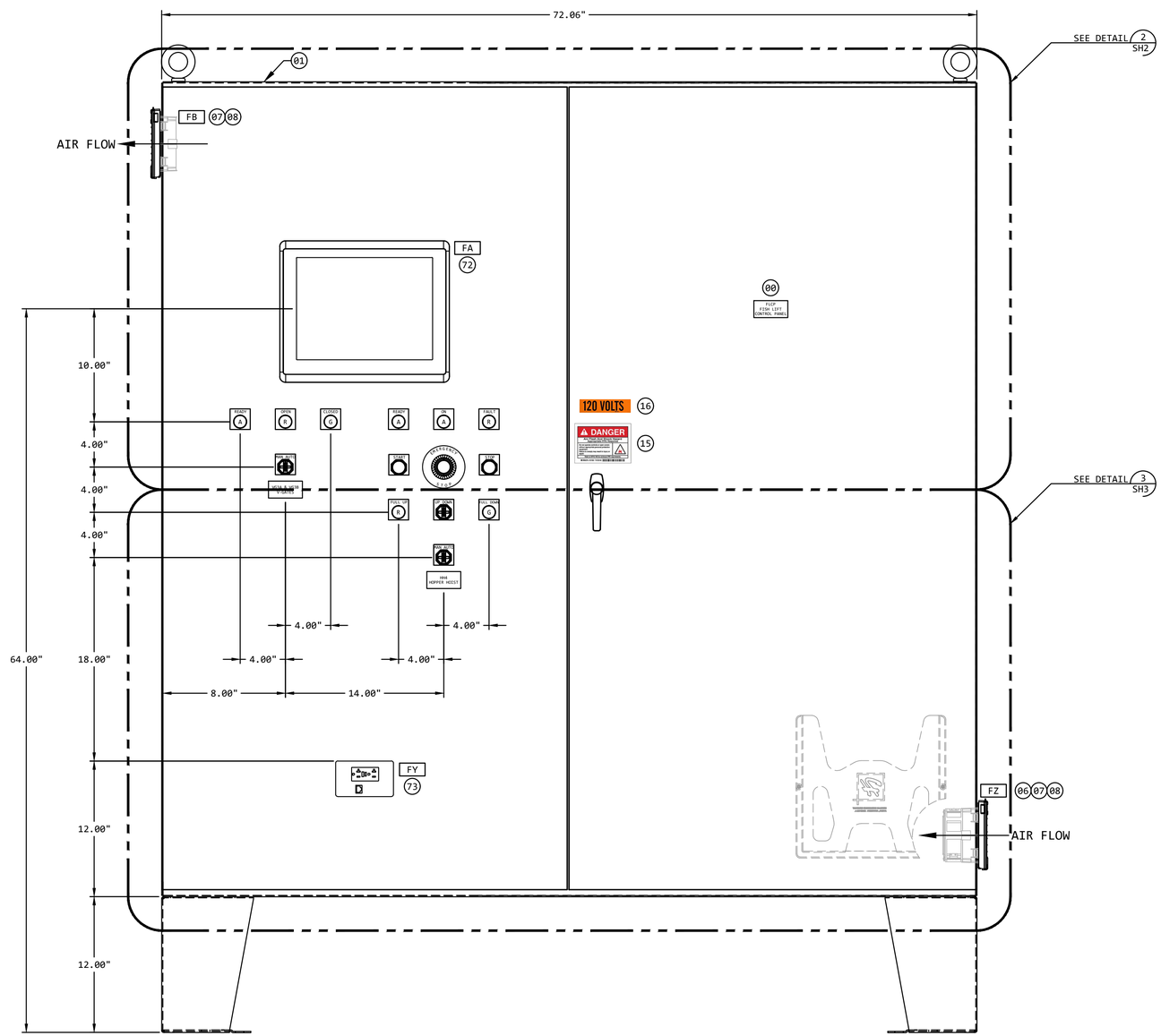

FLCP FRONT ELEVATION DETAIL 1

NO SCALE --

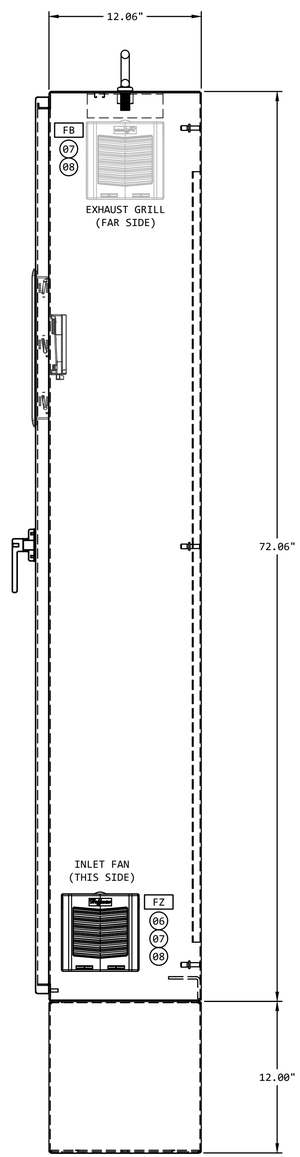

(FISH LIFT CONTROL PANEL)
SIDE ELEVATION

REVISION					
REV	DATE	DR	CK	AP	DESCRIPTION
0	03/28/2025	SAM	CMM	CMH	ISSUED FOR CONSTRUCTION

"Engineering with Distinction"
ELECTRICAL CONSULTANTS, INC.

THIS DRAWING IS THE PROPERTY OF ELECTRICAL CONSULTANTS, INC. AND IS TO BE USED ONLY FOR THE SPECIFIC PROJECT IDENTIFIED ON THE DRAWING. NO REVISIONS SHALL BE MADE WITHOUT THE EXPRESSED WRITTEN CONSENT OF ELECTRICAL CONSULTANTS, INC.

DRAWN BY: SAM	DATE: 02/22/2024	WOODLAND PULP, LLC WOODLAND FISH LIFT PASSAGE
CHECKED BY: CMM	DATE: 02/22/2024	EQUIPMENT LAYOUT - FRONT ELEVATION FISH LIFT CONTROL PANEL (FLCP)
APPROVED BY: CMH	DATE: 02/22/2024	TECHNOLOGY: HYDRO / DRAWING CATEGORY: LAYOUTS
SCALE: NONE	PROJECT NO.: ARL-007	DWG: EE-CE-002 SH1 / REV: 0

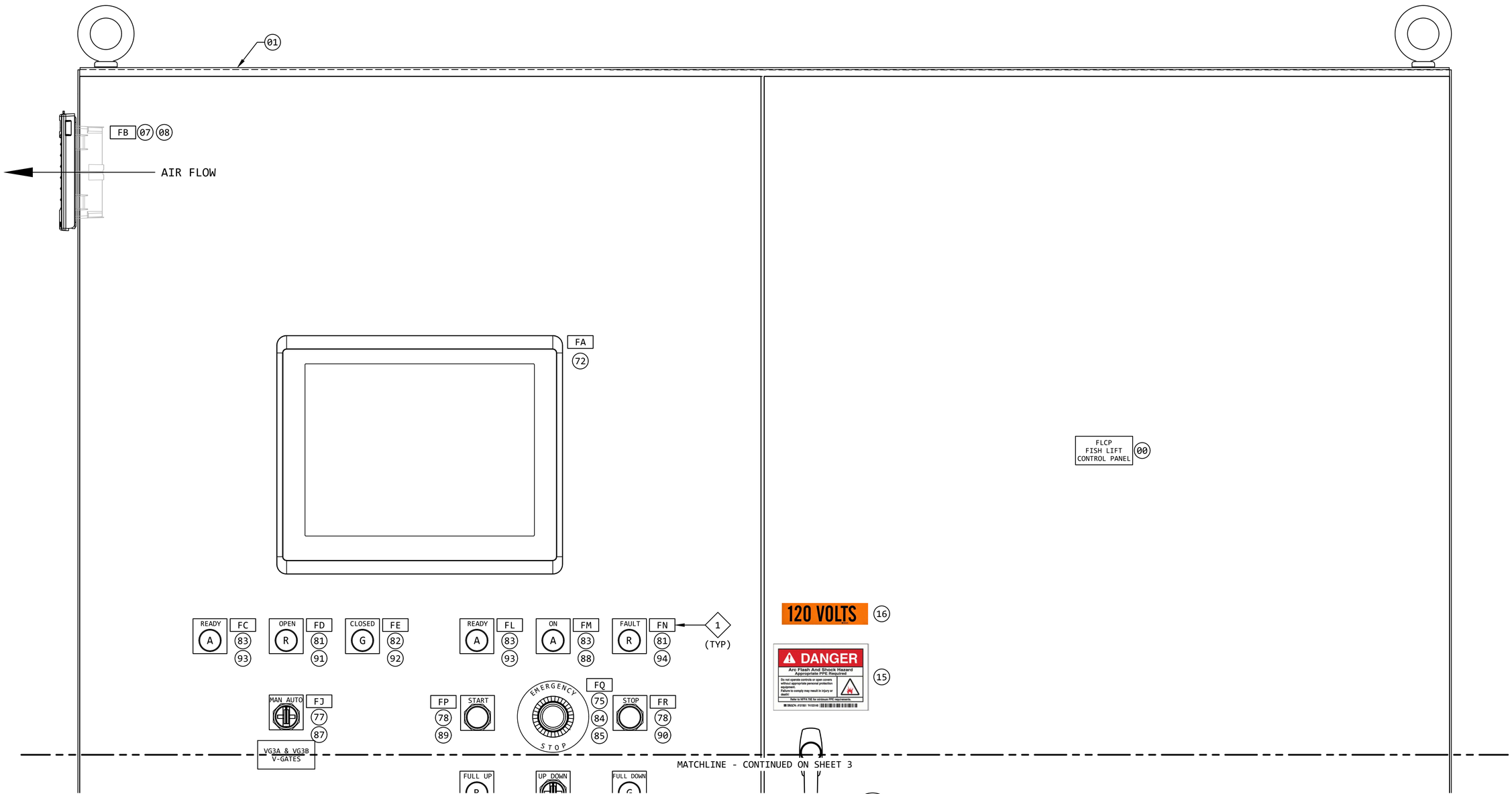

FRONT ELEVATION (TOP) DETAIL 2 SH1

NO SCALE

KEYED NOTES:

1. THE EQUIPMENT LOCATION TAGS SHOWN ON THE FRONT ELEVATION ARE SHOWN THERE FOR DEVICE LOCATION IDENTIFICATION PURPOSES ONLY. THEY SHALL NOT BE INSTALLED ON THE FRONT OF THE DOOR.

   THE EQUIPMENT LOCATION TAGS SHALL BE INSTALLED ON THE INSIDE OF THE DOOR, ADJACENT TO EACH DEVICE.

REVISION

REV	DATE	DR	CK	AP	DESCRIPTION
0	03/28/2025	SAM	CMM	CMH	ISSUED FOR CONSTRUCTION

ELECTRICAL CONSULTANTS, INC.

"Engineering with Distinction"

THIS DRAWING IS THE PROPERTY OF ELECTRICAL CONSULTANTS, INC. AND IS TO BE USED ONLY FOR THE SPECIFIC PROJECT IDENTIFIED ON THE DRAWING. NO REVISIONS SHALL BE MADE WITHOUT THE EXPRESSED WRITTEN CONSENT OF ELECTRICAL CONSULTANTS, INC.

DRAWN BY: SAM	DATE: 02/22/2024	WOODLAND PULP, LLC WOODLAND FISH LIFT PASSAGE
CHECKED BY: CMM	DATE: 02/22/2024	EQUIPMENT LAYOUT - FRONT ELEVATION (TOP) FISH LIFT CONTROL PANEL (FLCP)
APPROVED BY: CMH	DATE: 02/22/2024	TECHNOLOGY: HYDRO / DRAWING CATEGORY: LAYOUTS
SCALE: NONE	PROJECT NO.: ARL-007	DWG: EE-CE-002 SH2 / REV: 0

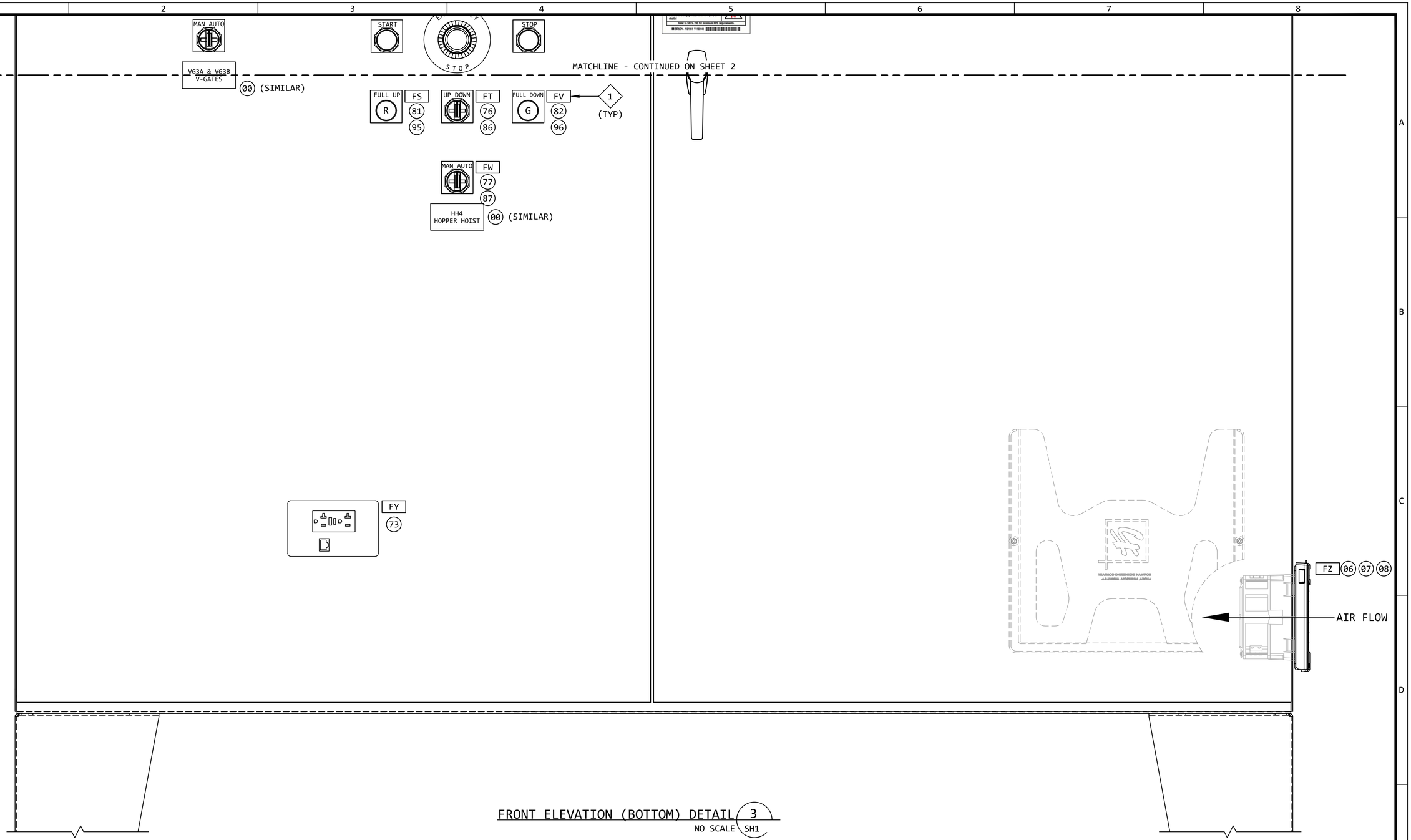

FRONT ELEVATION (BOTTOM) DETAIL 3
NO SCALE SH1

KEYED NOTES:

1. THE EQUIPMENT LOCATION TAGS SHOWN ON THE FRONT ELEVATION ARE SHOWN THERE FOR DEVICE LOCATION IDENTIFICATION PURPOSES ONLY. THEY SHALL NOT BE INSTALLED ON THE FRONT OF THE DOOR.

   THE EQUIPMENT LOCATION TAGS SHALL BE INSTALLED ON THE INSIDE OF THE DOOR, ADJACENT TO EACH DEVICE.

REVISION

REV	DATE	DR	CK	AP	DESCRIPTION
0	03/28/2025	SAM	CMM	CMH	ISSUED FOR CONSTRUCTION

"Engineering with Distinction"
ECI
ELECTRICAL CONSULTANTS, INC.

THIS DRAWING IS THE PROPERTY OF ELECTRICAL CONSULTANTS, INC. AND IS TO BE USED ONLY FOR THE SPECIFIC PROJECT IDENTIFIED ON THE DRAWING. NO REVISIONS SHALL BE MADE WITHOUT THE EXPRESSED WRITTEN CONSENT OF ELECTRICAL CONSULTANTS, INC.

DRAWN BY: SAM	DATE: 02/22/2024	WOODLAND PULP, LLC WOODLAND FISH LIFT PASSAGE
CHECKED BY: CMM	DATE: 02/22/2024	EQUIPMENT LAYOUT - FRONT ELEVATION (BOTTOM) FISH LIFT CONTROL PANEL (FLCP)
APPROVED BY: CMH	DATE: 02/22/2024	TECHNOLOGY: HYDRO / DRAWING CATEGORY: LAYOUTS
SCALE: NONE	PROJECT NO.: ARL-007	DWG: EE-CE-002 SH3 / REV: 0

KEYED NOTES:

1. INLET FAN FAN CUTOUT AND MOUNTING HOLES. (THIS SIDE)
   VERIFY ACTUAL DIMENSIONS FROM VENDOR DOCUMENTATION PRIOR TO ANY CUTTING OR DRILLING. IN ADDITION, VERIFY CLEARANCE WITH ALL EQUIPMENT AND DEVICES LOCATED INSIDE THE PANEL (ie: WIREWAY)

2. EXHAUST GRILL GRILL CUTOUT AND MOUNTING HOLES. (FAR SIDE)
   VERIFY ACTUAL DIMENSIONS FROM VENDOR DOCUMENTATION PRIOR TO ANY CUTTING OR DRILLING.

3. TIE ALL PANEL AND BACK PANEL GROUNDS TO THE GROUND BUS (TERMINAL BLOCK GB).

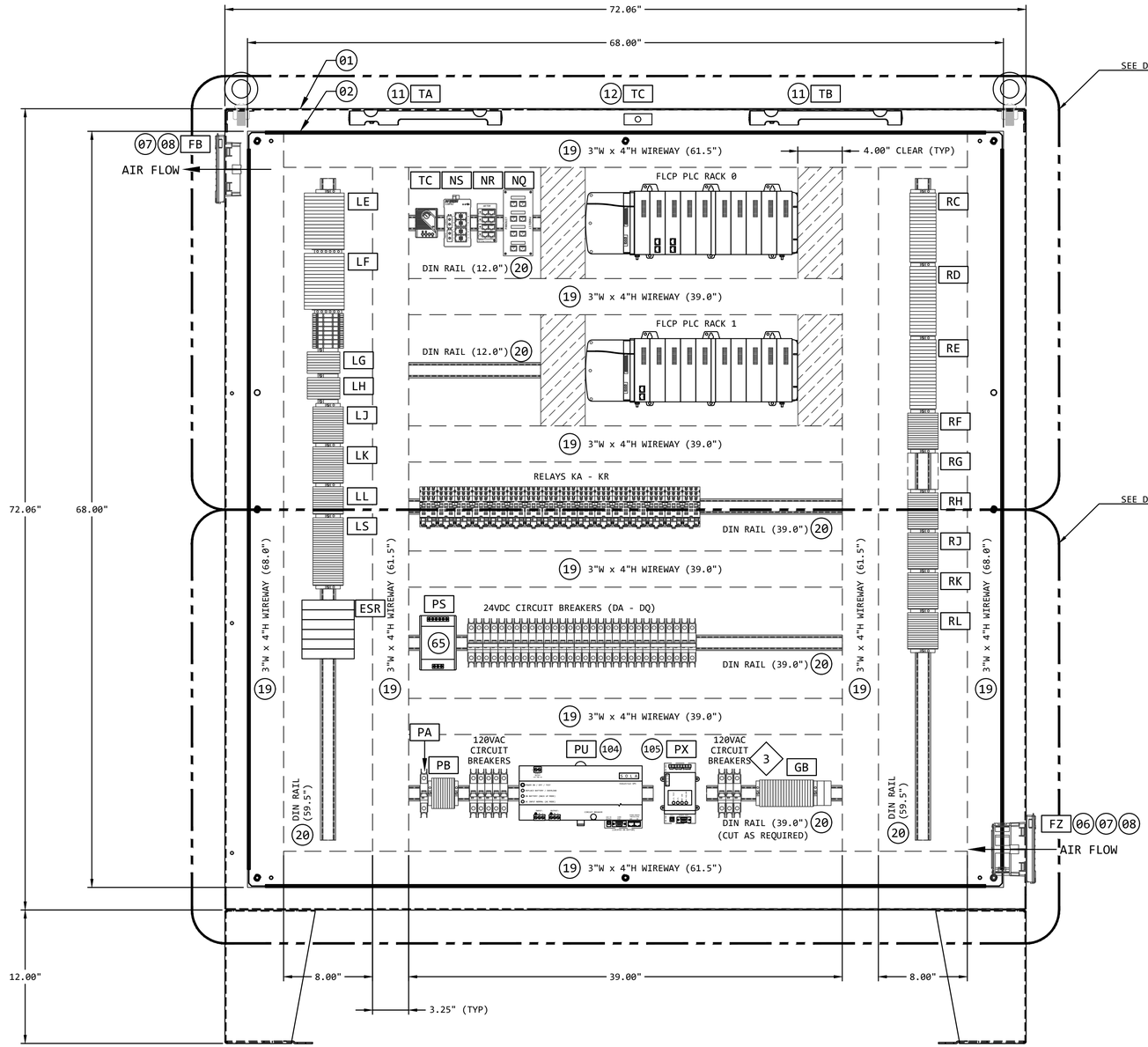

FLCP INTERIOR ELEVATION DETAIL 4
NO SCALE --

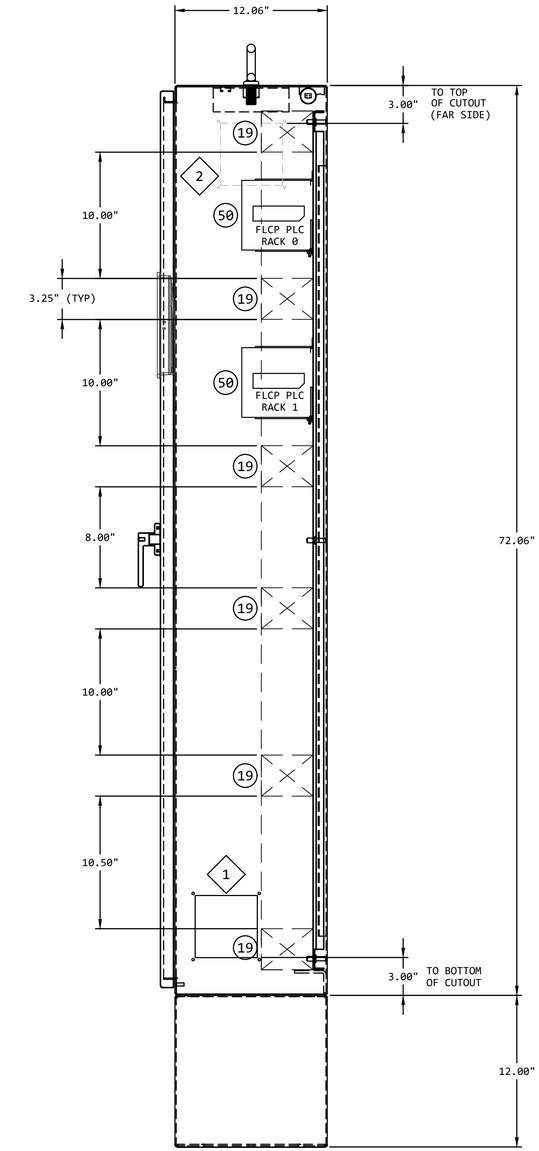

FLCP
FISH LIFT CONTROL PANEL
SIDE ELEVATION

REVISION

REV	DATE	DR	CK	AP	DESCRIPTION
0	03/28/2025	SAM	CMM	CMH	ISSUED FOR CONSTRUCTION

ECI "Engineering with Distinction"
ELECTRICAL CONSULTANTS, INC.

THIS DRAWING IS THE PROPERTY OF ELECTRICAL CONSULTANTS, INC. AND IS TO BE USED ONLY FOR THE SPECIFIC PROJECT IDENTIFIED ON THE DRAWING. NO REVISIONS SHALL BE MADE WITHOUT THE EXPRESSED WRITTEN CONSENT OF ELECTRICAL CONSULTANTS, INC.

DRAWN BY: SAM	DATE: 02/22/2024	WOODLAND PULP, LLC WOODLAND FISH LIFT PASSAGE
CHECKED BY: CMM	DATE: 02/22/2024	EQUIPMENT LAYOUT - INTERIOR ELEVATION FISH LIFT CONTROL PANEL (FLCP)
APPROVED BY: CMH	DATE: 02/22/2024	TECHNOLOGY: HYDRO / DRAWING CATEGORY: LAYOUTS
SCALE: NONE	PROJECT NO.: ARL-007	DWG: EE-CE-002 SH4 / REV: 0

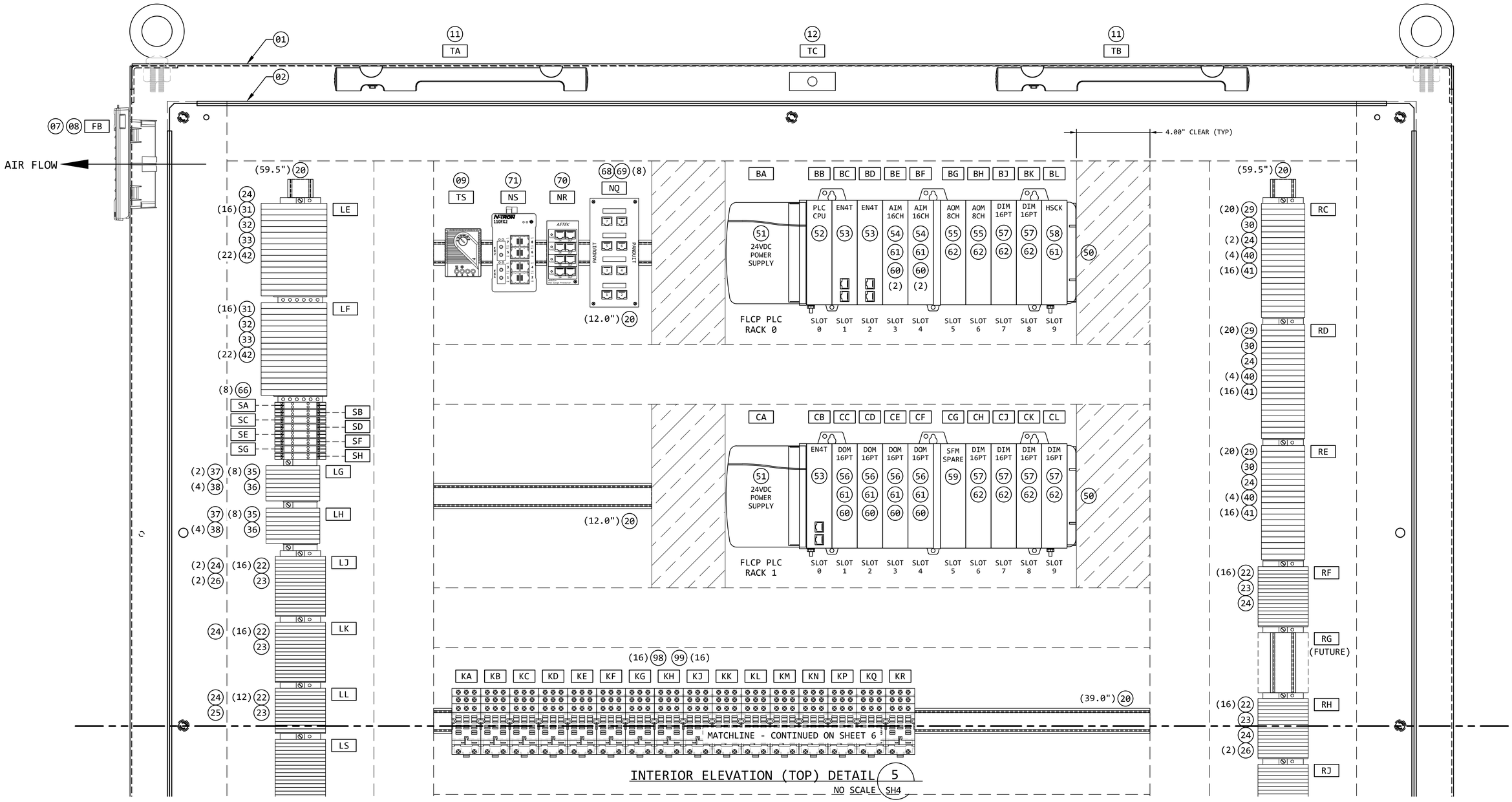

INTERIOR ELEVATION (TOP) DETAIL 5
NO SCALE SH4

REVISION					
REV	DATE	DR	CK	AP	DESCRIPTION
0	03/28/2025	SAM	CMM	CMH	ISSUED FOR CONSTRUCTION

"Engineering with Distinction"
ELECTRICAL CONSULTANTS, INC.

THIS DRAWING IS THE PROPERTY OF ELECTRICAL CONSULTANTS, INC. AND IS TO BE USED ONLY FOR THE SPECIFIC PROJECT IDENTIFIED ON THE DRAWING. NO REVISIONS SHALL BE MADE WITHOUT THE EXPRESSED WRITTEN CONSENT OF ELECTRICAL CONSULTANTS, INC.

DRAWN BY: SAM	DATE: 02/22/2024	WOODLAND PULP, LLC WOODLAND FISH LIFT PASSAGE
CHECKED BY: CMM	DATE: 02/22/2024	EQUIPMENT LAYOUT - INTERIOR ELEVATION (TOP) FISH LIFT CONTROL PANEL (FLCP)
APPROVED BY: CMH	DATE: 02/22/2024	TECHNOLOGY: HYDRO / DRAWING CATEGORY: LAYOUTS
SCALE: NONE	PROJECT NO.: ARL-007	DWG: EE-CE-002 SH5 / REV: 0

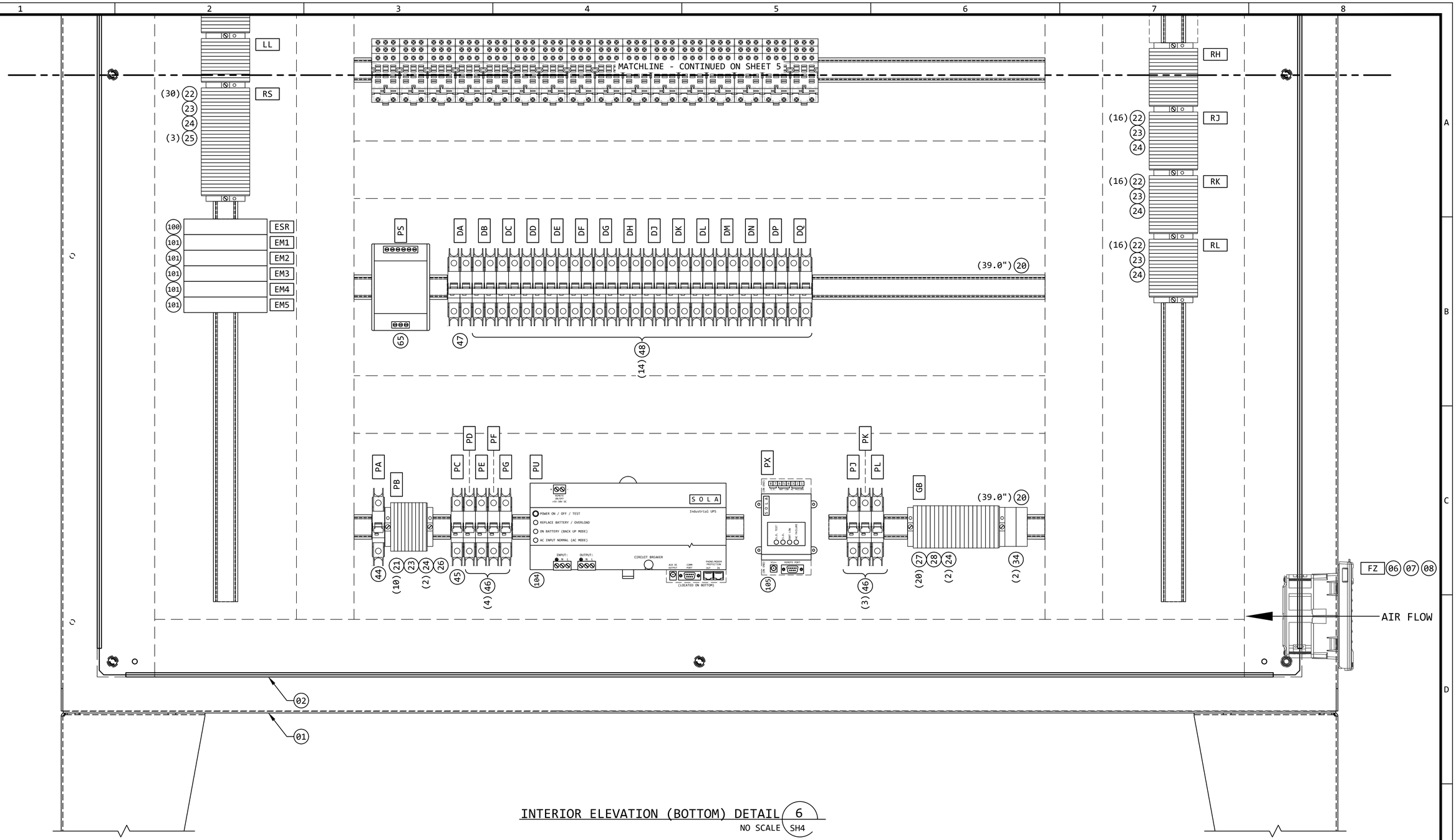

INTERIOR ELEVATION (BOTTOM) DETAIL 6 SH4

NO SCALE

REVISION					
REV	DATE	DR	CK	AP	DESCRIPTION
0	03/28/2025	SAM	CMM	CMH	ISSUED FOR CONSTRUCTION

"Engineering with Distinction"

ELECTRICAL CONSULTANTS, INC.

THIS DRAWING IS THE PROPERTY OF ELECTRICAL CONSULTANTS, INC. AND IS TO BE USED ONLY FOR THE SPECIFIC PROJECT IDENTIFIED ON THE DRAWING. NO REVISIONS SHALL BE MADE WITHOUT THE EXPRESSED WRITTEN CONSENT OF ELECTRICAL CONSULTANTS, INC.

DRAWN BY: SAM	DATE: 02/22/2024	WOODLAND PULP, LLC WOODLAND FISH LIFT PASSAGE
CHECKED BY: CMM	DATE: 02/22/2024	EQUIPMENT LAYOUT - INTERIOR ELEV. (BOTTOM) FISH LIFT CONTROL PANEL (FLCP)
APPROVED BY: CMH	DATE: 02/22/2024	TECHNOLOGY: HYDRO / DRAWING CATEGORY: LAYOUTS
SCALE: NONE	PROJECT NO.: ARL-007	DWG: EE-CE-002 SH6 / REV: 0

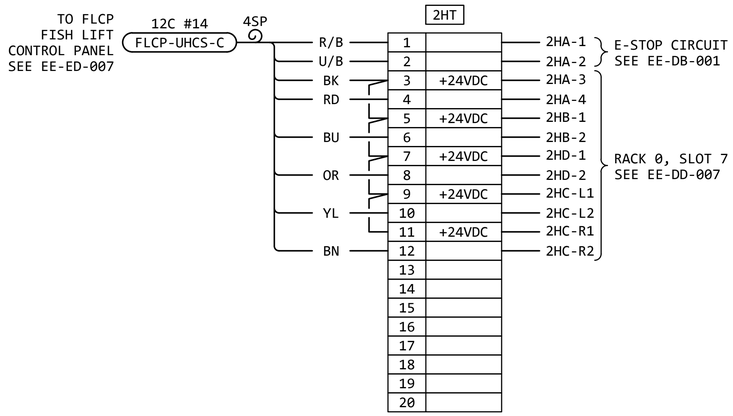

INTERCONNECTION DIAGRAM

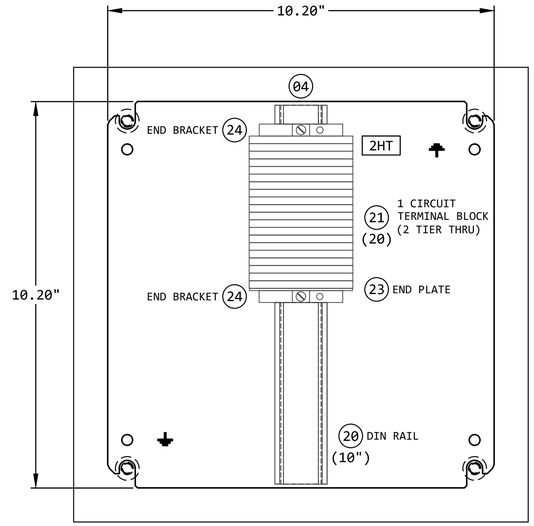

INTERIOR ELEVATION

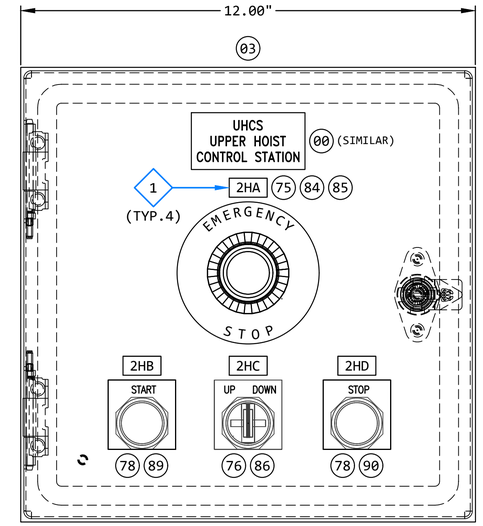

FRONT ELEVATION

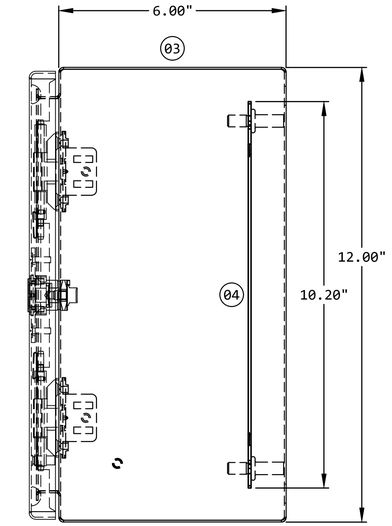

SIDE VIEW

UHCS
UPPER
HOIST CONTROL STATION

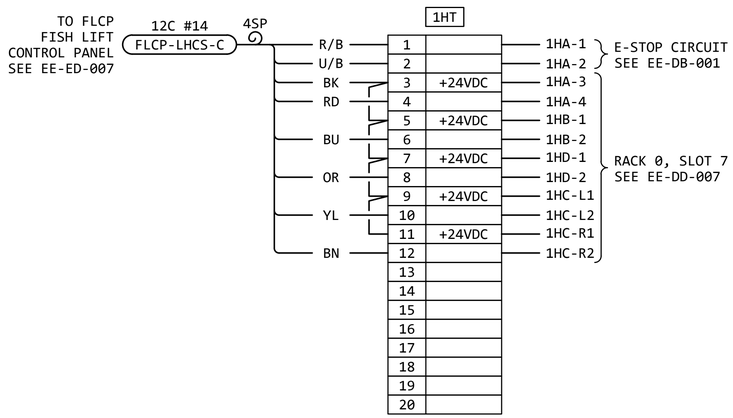

INTERCONNECTION DIAGRAM

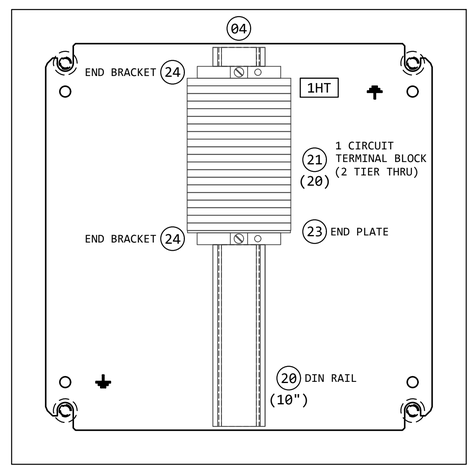

INTERIOR ELEVATION

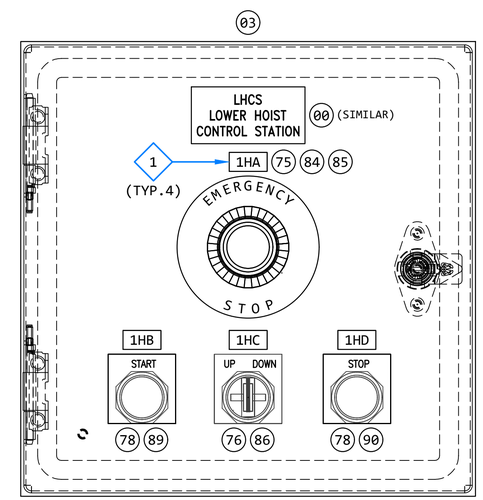

FRONT ELEVATION

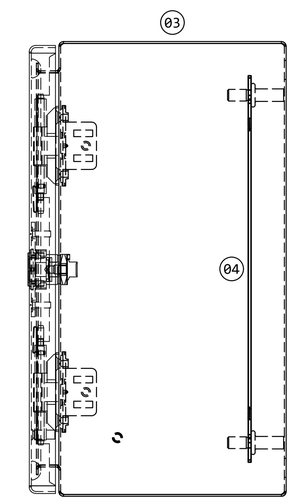

SIDE VIEW

LHCS
LOWER
HOIST CONTROL STATION

KEYED NOTES:

1. THE EQUIPMENT LOCATION TAGS SHOWN ON THE FRONT ELEVATIONS ARE SHOWN THERE FOR DEVICE LOCATION IDENTIFICATION PURPOSES ONLY. THEY SHALL NOT BE INSTALLED ON THE FRONT OF THE DOOR.

   THE EQUIPMENT LOCATION TAGS SHALL BE INSTALLED ON THE INSIDE OF THE DOOR, ADJACENT TO EACH DEVICE.

REVISION

REV	DATE	DR	CK	AP	DESCRIPTION
0	03/28/2025	SAM	CMM	CMH	ISSUED FOR CONSTRUCTION

EGI "Engineering with Distinction"
ELECTRICAL CONSULTANTS, INC.

THIS DRAWING IS THE PROPERTY OF ELECTRICAL CONSULTANTS, INC. AND IS TO BE USED ONLY FOR THE SPECIFIC PROJECT IDENTIFIED ON THE DRAWING. NO REVISIONS SHALL BE MADE WITHOUT THE EXPRESSED WRITTEN CONSENT OF ELECTRICAL CONSULTANTS, INC.

DRAWN BY: SAM	DATE: 02/22/2024	WOODLAND PULP, LLC WOODLAND FISH LIFT PASSAGE
CHECKED BY: CMM	DATE: 02/22/2024	EQUIPMENT LAYOUT - FRONT ELEVATION HOIST CONTROL STATIONS (UHCS & LHCS)
APPROVED BY: CMH	DATE: 02/22/2024	TECHNOLOGY: HYDRO / DRAWING CATEGORY: LAYOUTS
SCALE: HALF	PROJECT NO.: ARL-007	DWG: EE-CE-003 / REV: 0

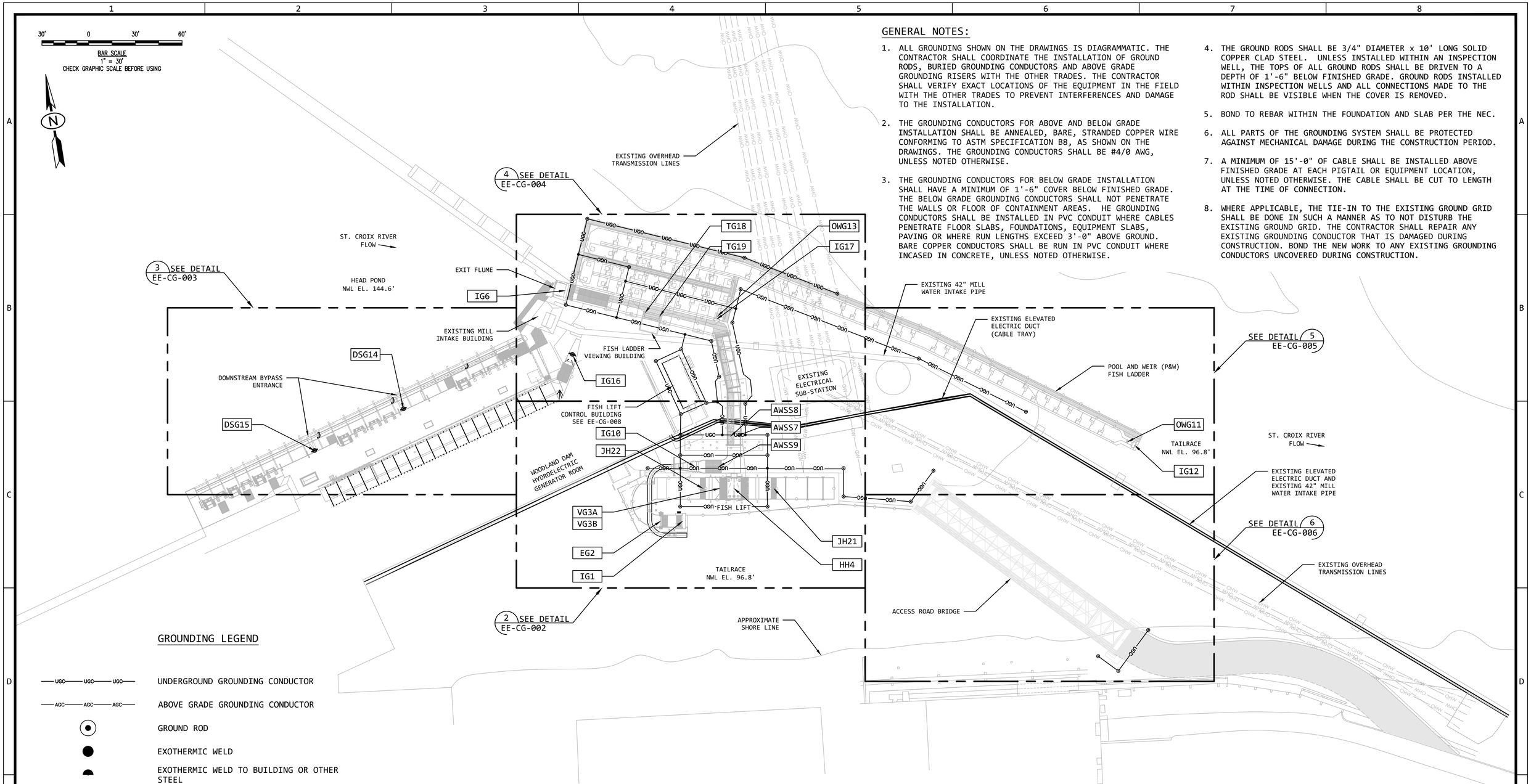

GENERAL NOTES:

1. ALL GROUNDING SHOWN ON THE DRAWINGS IS DIAGRAMMATIC. THE CONTRACTOR SHALL COORDINATE THE INSTALLATION OF GROUND RODS, BURIED GROUNDING CONDUCTORS AND ABOVE GRADE GROUNDING RISERS WITH THE OTHER TRADES. THE CONTRACTOR SHALL VERIFY EXACT LOCATIONS OF THE EQUIPMENT IN THE FIELD WITH THE OTHER TRADES TO PREVENT INTERFERENCES AND DAMAGE TO THE INSTALLATION.
2. THE GROUNDING CONDUCTORS FOR ABOVE AND BELOW GRADE INSTALLATION SHALL BE ANNEALED, BARE, STRANDED COPPER WIRE CONFORMING TO ASTM SPECIFICATION B8, AS SHOWN ON THE DRAWINGS. THE GROUNDING CONDUCTORS SHALL BE #4/0 AWG, UNLESS NOTED OTHERWISE.
3. THE GROUNDING CONDUCTORS FOR BELOW GRADE INSTALLATION SHALL HAVE A MINIMUM OF 1'-6" COVER BELOW FINISHED GRADE. THE BELOW GRADE GROUNDING CONDUCTORS SHALL NOT PENETRATE THE WALLS OR FLOOR OF CONTAINMENT AREAS. HE GROUNDING CONDUCTORS SHALL BE INSTALLED IN PVC CONDUIT WHERE CABLES PENETRATE FLOOR SLABS, FOUNDATIONS, EQUIPMENT SLABS, PAVING OR WHERE RUN LENGTHS EXCEED 3'-0" ABOVE GROUND. BARE COPPER CONDUCTORS SHALL BE RUN IN PVC CONDUIT WHERE INCASED IN CONCRETE, UNLESS NOTED OTHERWISE.
4. THE GROUND RODS SHALL BE 3/4" DIAMETER x 10' LONG SOLID COPPER CLAD STEEL. UNLESS INSTALLED WITHIN AN INSPECTION WELL, THE TOPS OF ALL GROUND RODS SHALL BE DRIVEN TO A DEPTH OF 1'-6" BELOW FINISHED GRADE. GROUND RODS INSTALLED WITHIN INSPECTION WELLS AND ALL CONNECTIONS MADE TO THE ROD SHALL BE VISIBLE WHEN THE COVER IS REMOVED.
5. BOND TO REBAR WITHIN THE FOUNDATION AND SLAB PER THE NEC.
6. ALL PARTS OF THE GROUNDING SYSTEM SHALL BE PROTECTED AGAINST MECHANICAL DAMAGE DURING THE CONSTRUCTION PERIOD.
7. A MINIMUM OF 15'-0" OF CABLE SHALL BE INSTALLED ABOVE FINISHED GRADE AT EACH PIGTAIL OR EQUIPMENT LOCATION, UNLESS NOTED OTHERWISE. THE CABLE SHALL BE CUT TO LENGTH AT THE TIME OF CONNECTION.
8. WHERE APPLICABLE, THE TIE-IN TO THE EXISTING GROUND GRID SHALL BE DONE IN SUCH A MANNER AS TO NOT DISTURB THE EXISTING GROUND GRID. THE CONTRACTOR SHALL REPAIR ANY EXISTING GROUNDING CONDUCTOR THAT IS DAMAGED DURING CONSTRUCTION. BOND THE NEW WORK TO ANY EXISTING GROUNDING CONDUCTORS UNCOVERED DURING CONSTRUCTION.

GROUNDING LEGEND

- UGC — UNDERGROUND GROUNDING CONDUCTOR
- AGC — ABOVE GRADE GROUNDING CONDUCTOR
- GROUND ROD
- EXOTHERMIC WELD
- EXOTHERMIC WELD TO BUILDING OR OTHER STEEL
- EXOTHERMIC WELD AND CONDUIT
- CONDUIT AND PIGTAIL
- CONNECTION TO EXISTING GROUND GRID
- SKID MOUNTED GROUND LUG
- GROUND BAR
- EXOTHERMIC WELD TO REBAR (F)
  - D = TIE TO DUCTBANK REBAR
  - F = TIE TO FOUNDATION REBAR
  - S = TIE TO SLAB REBAR

GROUNDING PLAN - FISH LIFT PASSAGE SITE (1)

SCALE: 1" = 30' (--)

REVISION

REV	DATE	DR	CK	AP	DESCRIPTION
0	03/28/2025	SAM	CMM	CMH	ISSUED FOR CONSTRUCTION

ECI "Engineering with Distinction" ELECTRICAL CONSULTANTS, INC.

THIS DRAWING IS THE PROPERTY OF ELECTRICAL CONSULTANTS, INC. AND IS TO BE USED ONLY FOR THE SPECIFIC PROJECT IDENTIFIED ON THE DRAWING. NO REVISIONS SHALL BE MADE WITHOUT THE EXPRESSED WRITTEN CONSENT OF ELECTRICAL CONSULTANTS, INC.

DRAWN BY: SAM	DATE: 08/22/2024	WOODLAND PULP, LLC WOODLAND FISH LIFT PASSAGE
CHECKED BY: CMM	DATE: 08/22/2024	GROUNDING PLAN FISH LIFT PASSAGE SITE
APPROVED BY: CMH	DATE: 08/22/2024	TECHNOLOGY: HYDRO / DRAWING CATEGORY: LAYOUTS
SCALE: AS NOTED	PROJECT NO.: ARL-007	DWG: EE-CG-001 / REV: 0

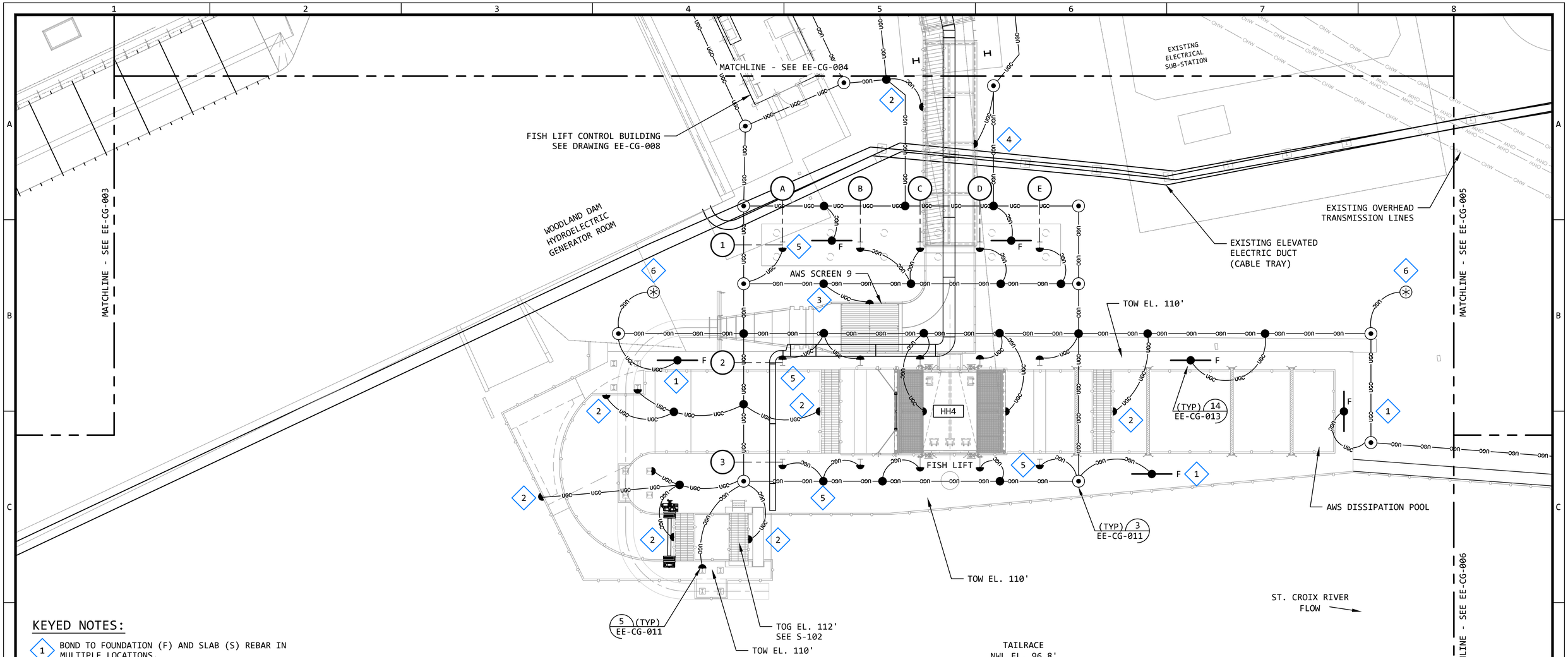

KEYED NOTES:

1. BOND TO FOUNDATION (F) AND SLAB (S) REBAR IN MULTIPLE LOCATIONS.
2. PROVIDE PIGTAILS FOR THE CATWALK/RAILING. BOND TO CATWALK/RAILING METAL AFTER EQUIPMENT INSTALLATION.
3. PROVIDE PIGTAILS FOR THE AWS SCREEN. BOND TO AWS SCREEN METAL AFTER EQUIPMENT INSTALLATION.
4. PROVIDE PIGTAILS FOR THE STEEL EXIT FLUME. BOND TO THE STEEL EXIT FLUME METAL AFTER EQUIPMENT INSTALLATION.
5. PROVIDE PIGTAILS FOR ALL 15 COLUMNS OF THE FISH LIFT TOWER. BOND TO EACH FISH LIFT TOWER COLUMN AFTER EQUIPMENT INSTALLATION.
6. WHERE APPLICABLE, THE TIE-IN TO THE EXISTING GROUND GRID SHALL BE DONE IN SUCH A MANNER AS TO NOT DISTURB THE EXISTING GROUND GRID. THE CONTRACTOR SHALL REPAIR ANY EXISTING GROUNDING CONDUCTOR THAT IS DAMAGED DURING CONSTRUCTION. BOND THE NEW WORK TO ANY EXISTING GROUNDING CONDUCTORS UNCOVERED DURING CONSTRUCTION.

GENERAL NOTES:

1. THE CONTRACTOR SHALL ENSURE THAT ALL ADJACENT METAL STRUCTURES, SUCH AS CATWALK FRAMES, GRATES, PIPE SUPPORTS, HOIST FRAMES AND THE LIKE, ARE BONDED TO THE BELOW GRADE GRID.

GROUNDING PLAN - FISH LIFT AREA (2)

SCALE: 1/8" = 1'-0"

REVISION

REV	DATE	DR	CK	AP	DESCRIPTION
0	03/28/2025	SAM	CMM	CMH	ISSUED FOR CONSTRUCTION

ECI "Engineering with Distinction"
ELECTRICAL CONSULTANTS, INC.

THIS DRAWING IS THE PROPERTY OF ELECTRICAL CONSULTANTS, INC. AND IS TO BE USED ONLY FOR THE SPECIFIC PROJECT IDENTIFIED ON THE DRAWING. NO REVISIONS SHALL BE MADE WITHOUT THE EXPRESSED WRITTEN CONSENT OF ELECTRICAL CONSULTANTS, INC.

DRAWN BY: SAM	DATE: 08/22/2024	WOODLAND PULP, LLC WOODLAND FISH LIFT PASSAGE
CHECKED BY: CMM	DATE: 08/22/2024	GROUNDING PLAN FISH LIFT AREA
APPROVED BY: CMH	DATE: 08/22/2024	TECHNOLOGY: HYDRO / DRAWING CATEGORY: LAYOUTS
SCALE: AS NOTED	PROJECT NO.: ARL-007	DWG: EE-CG-002 / REV: 0

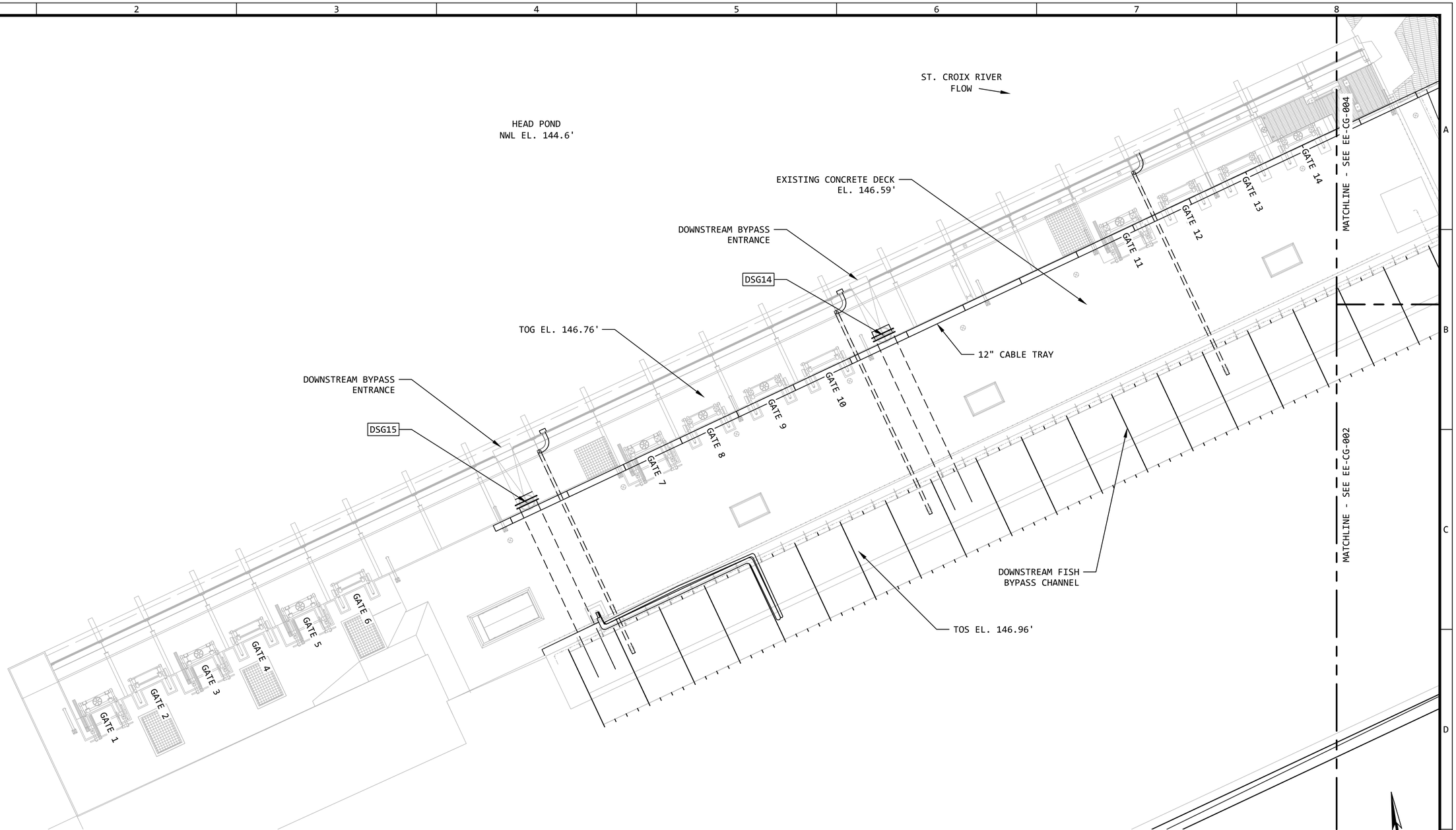

GROUNDING PLAN - DOWNSTREAM FISH BYPASS AREA (3)

SCALE: 1/8" = 1'-0"

12' 8' 4' 0 8' 16'

BAR SCALE
1/8" = 1'-0"
CHECK GRAPHIC SCALE BEFORE USING

N

GENERAL NOTES:

1. THE BELOW GRADE GROUND GRID IS NOT AVAILABLE IN THIS AREA. ALL REQUIRED GROUNDING FOR THE DSG14/DSG15 INSTALLATION MAY BE ACCOMPLISHED BY USING THE #2/0 BARE GROUNDING CONDUCTOR PROVIDED WITH THE CABLE TRAY.

REVISION

REV	DATE	DR	CK	AP	DESCRIPTION
0	03/28/2025	SAM	CMM	CMH	ISSUED FOR CONSTRUCTION

"Engineering with Distinction"
ECI
ELECTRICAL CONSULTANTS, INC.

THIS DRAWING IS THE PROPERTY OF ELECTRICAL CONSULTANTS, INC. AND IS TO BE USED ONLY FOR THE SPECIFIC PROJECT IDENTIFIED ON THE DRAWING. NO REVISIONS SHALL BE MADE WITHOUT THE EXPRESSED WRITTEN CONSENT OF ELECTRICAL CONSULTANTS, INC.

DRAWN BY: SAM	DATE: 08/22/2024	WOODLAND PULP, LLC WOODLAND FISH LIFT PASSAGE
CHECKED BY: CMM	DATE: 08/22/2024	GROUNDING PLAN DOWNSTREAM FISH BYPASS AREA
APPROVED BY: CMH	DATE: 08/22/2024	TECHNOLOGY: HYDRO / DRAWING CATEGORY: LAYOUTS
SCALE: AS NOTED	PROJECT NO.: ARL-007	DWG: EE-CG-003 / REV: 0

GENERAL NOTES:

1. THE CONTRACTOR SHALL ENSURE THAT ALL ADJACENT METAL STRUCTURES, SUCH AS CATWALK FRAMES, GRATES, PIPE SUPPORTS, HOIST FRAMES AND THE LIKE, ARE BONDED TO THE BELOW GRADE GRID.

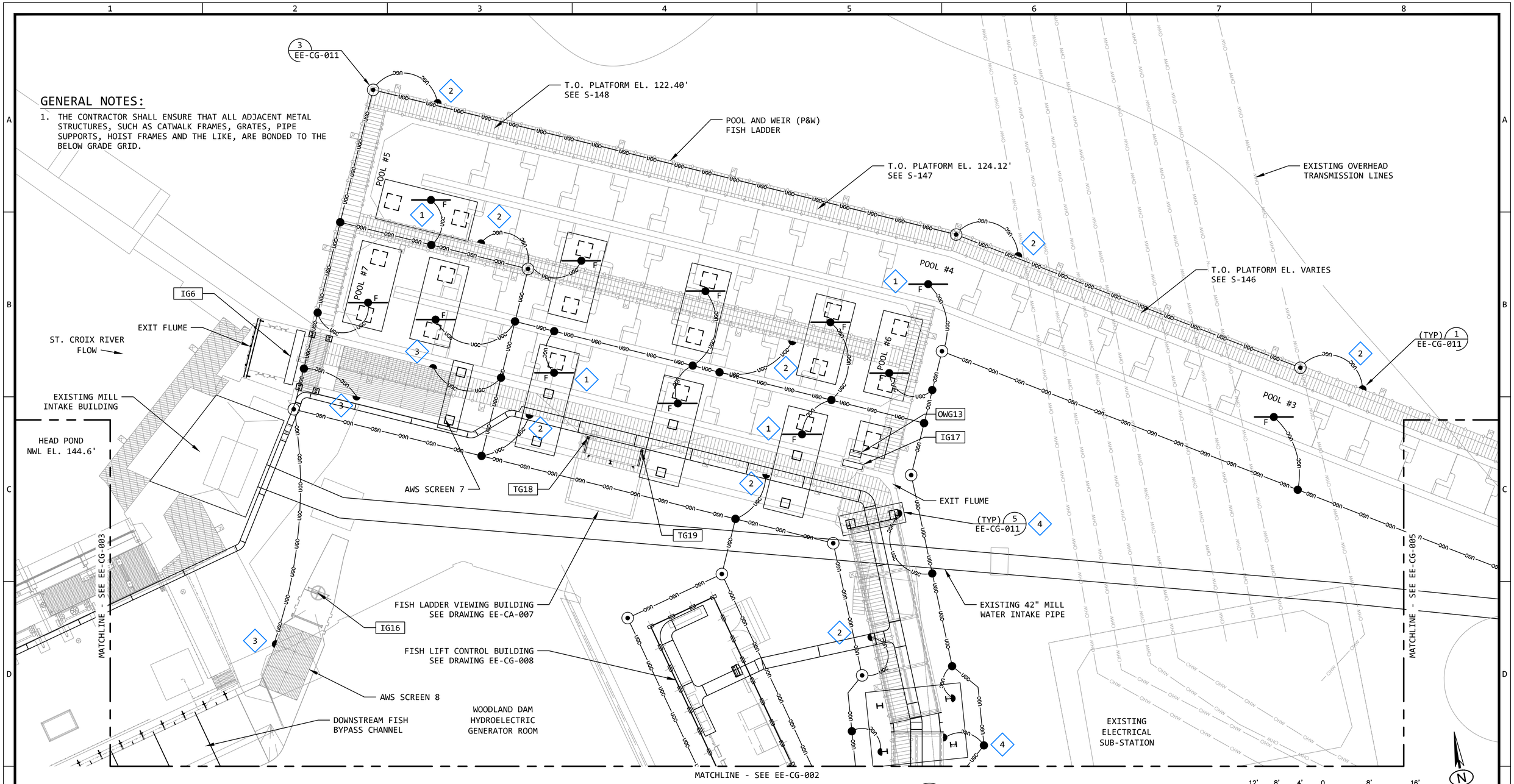

GROUNDING PLAN - EXIT FLUME AND FISH LADDER AREAS (4)

SCALE: 1/8" = 1'-0" (--)

12' 8' 4' 0 8' 16'

BAR SCALE
1/8" = 1'-0"
CHECK GRAPHIC SCALE BEFORE USING

KEYED NOTES:

1. BOND TO FOUNDATION (F) AND SLAB (S) REBAR IN MULTIPLE LOCATIONS.
2. PROVIDE PIGTAILS FOR THE CATWALK/RAILING. BOND TO CATWALK/RAILING METAL AFTER EQUIPMENT INSTALLATION.
3. PROVIDE PIGTAILS FOR THE AWS SCREENS. BOND TO AWS SCREEN METAL AFTER EQUIPMENT INSTALLATION.
4. PROVIDE PIGTAILS FOR THE STEEL EXIT FLUME. BOND TO THE STEEL EXIT FLUME METAL AFTER EQUIPMENT INSTALLATION.

REVISION

REV	DATE	DR	CK	AP	DESCRIPTION
0	03/28/2025	SAM	CMM	CMH	ISSUED FOR CONSTRUCTION

ECI "Engineering with Distinction"
ELECTRICAL CONSULTANTS, INC.

THIS DRAWING IS THE PROPERTY OF ELECTRICAL CONSULTANTS, INC. AND IS TO BE USED ONLY FOR THE SPECIFIC PROJECT IDENTIFIED ON THE DRAWING. NO REVISIONS SHALL BE MADE WITHOUT THE EXPRESSED WRITTEN CONSENT OF ELECTRICAL CONSULTANTS, INC.

DRAWN BY: SAM	DATE: 08/22/2024	WOODLAND PULP, LLC WOODLAND FISH LIFT PASSAGE	
CHECKED BY: CMM	DATE: 08/22/2024	GROUNDING PLAN EXIT FLUME AND FISH LADDER AREAS	
APPROVED BY: CMH	DATE: 08/22/2024	TECHNOLOGY: HYDRO	DRAWING CATEGORY: LAYOUTS
SCALE: AS NOTED	PROJECT NO.: ARL-007	DWG: EE-CG-004	REV: 0

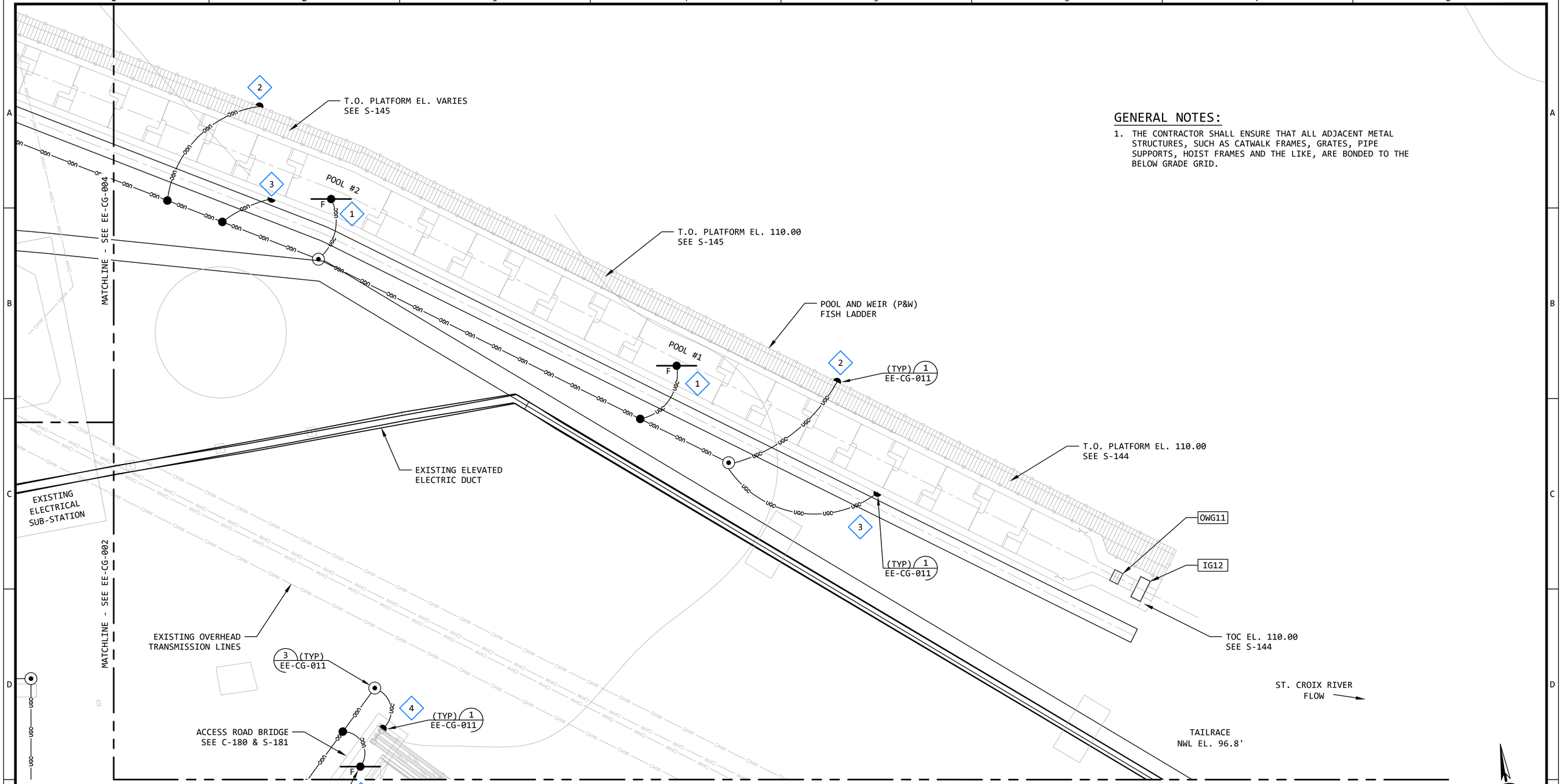

GENERAL NOTES:

1. THE CONTRACTOR SHALL ENSURE THAT ALL ADJACENT METAL STRUCTURES, SUCH AS CATWALK FRAMES, GRATES, PIPE SUPPORTS, HOIST FRAMES AND THE LIKE, ARE BONDED TO THE BELOW GRADE GRID.

GROUNDING PLAN - FISH LADDER AREA (5)

SCALE: 1/8" = 1'-0" (--)

KEYED NOTES:

1. BOND TO FOUNDATION (F) AND SLAB (S) REBAR IN MULTIPLE LOCATIONS.
2. PROVIDE PIGTAILS FOR THE CATWALK/RAILING. BOND TO CATWALK/RAILING METAL AFTER EQUIPMENT INSTALLATION.
3. PROVIDE PIGTAILS FOR THE BYPASS PIPE/PIPE SUPPORT. BOND TO BYPASS PIPE/PIPE SUPPORT METAL AFTER EQUIPMENT INSTALLATION.
4. PROVIDE PIGTAILS FOR THE BRIDGE. BOND TO BRIDGE METAL AFTER EQUIPMENT INSTALLATION.

REVISION

REV	DATE	DR	CK	AP	DESCRIPTION
0	03/28/2025	SAM	CMM	CMH	ISSUED FOR CONSTRUCTION

ECI "Engineering with Distinction"
ELECTRICAL CONSULTANTS, INC.

THIS DRAWING IS THE PROPERTY OF ELECTRICAL CONSULTANTS, INC. AND IS TO BE USED ONLY FOR THE SPECIFIC PROJECT IDENTIFIED ON THE DRAWING. NO REVISIONS SHALL BE MADE WITHOUT THE EXPRESSED WRITTEN CONSENT OF ELECTRICAL CONSULTANTS, INC.

DRAWN BY: SAM	DATE: 08/22/2024	WOODLAND PULP, LLC WOODLAND FISH LIFT PASSAGE
CHECKED BY: CMM	DATE: 08/22/2024	GROUNDING PLAN FISH LADDER AREA
APPROVED BY: CMH	DATE: 08/22/2024	TECHNOLOGY: HYDRO / DRAWING CATEGORY: LAYOUTS
SCALE: AS NOTED	PROJECT NO.: ARL-007	DWG: EE-CG-005 / REV: 0

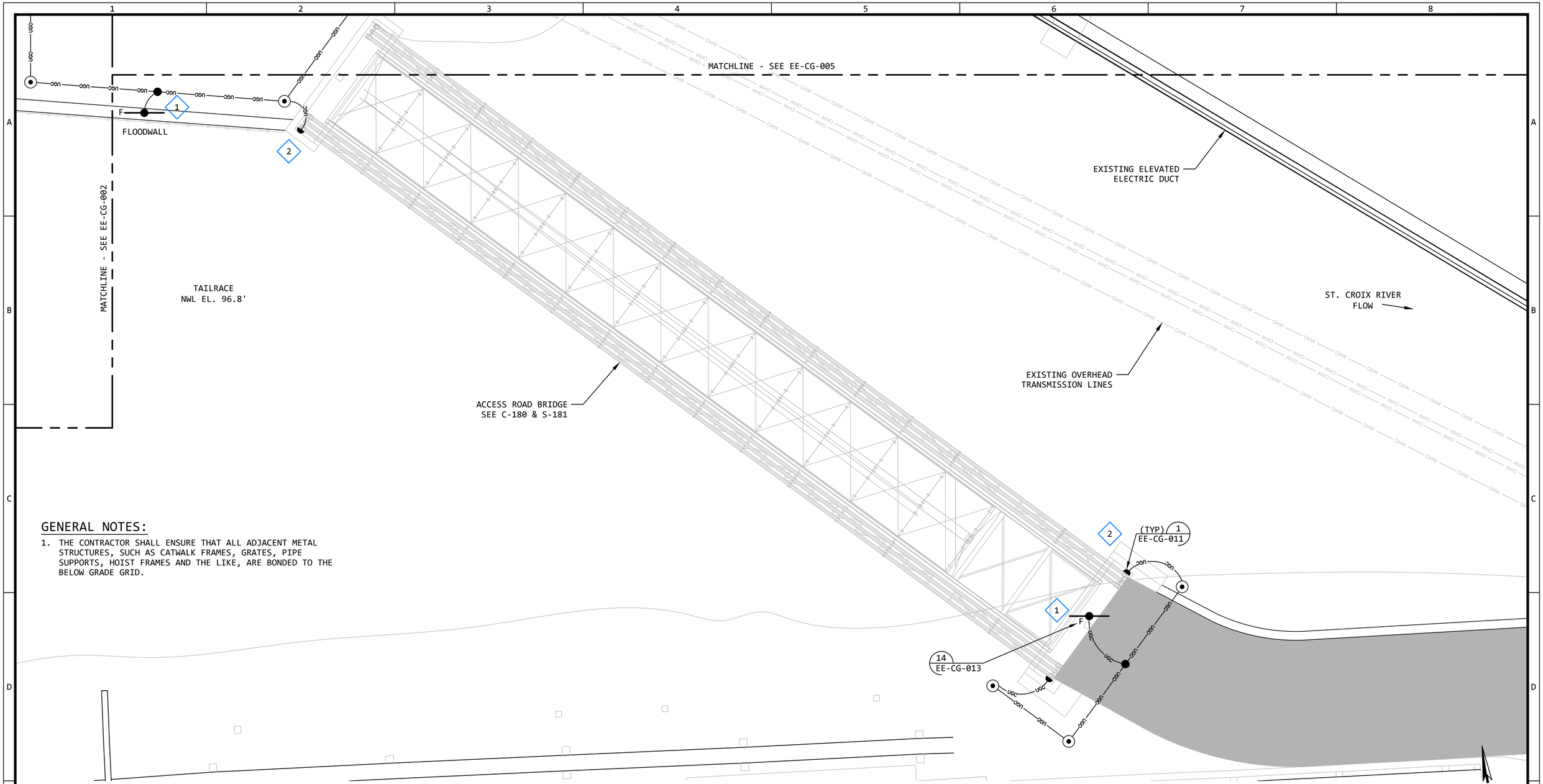

GENERAL NOTES:

1. THE CONTRACTOR SHALL ENSURE THAT ALL ADJACENT METAL STRUCTURES, SUCH AS CATWALK FRAMES, GRATES, PIPE SUPPORTS, HOIST FRAMES AND THE LIKE, ARE BONDED TO THE BELOW GRADE GRID.

GROUNDING PLAN - ACCESS ROAD BRIDGE AREA

6 / --

SCALE: 1/8" = 1'-0"

KEYED NOTES:

1. BOND TO FOUNDATION (F) AND SLAB (S) REBAR IN MULTIPLE LOCATIONS.
2. PROVIDE PIGTAILS FOR THE BRIDGE. BOND TO BRIDGE METAL AFTER EQUIPMENT INSTALLATION.

REVISION

REV	DATE	DR	CK	AP	DESCRIPTION
0	03/28/2025	SAM	CMM	CMH	ISSUED FOR CONSTRUCTION

"Engineering with Distinction"
ELECTRICAL CONSULTANTS, INC.

THIS DRAWING IS THE PROPERTY OF ELECTRICAL CONSULTANTS, INC. AND IS TO BE USED ONLY FOR THE SPECIFIC PROJECT IDENTIFIED ON THE DRAWING. NO REVISIONS SHALL BE MADE WITHOUT THE EXPRESSED WRITTEN CONSENT OF ELECTRICAL CONSULTANTS, INC.

DRAWN BY: SAM	DATE: 08/22/2024	WOODLAND PULP, LLC WOODLAND FISH LIFT PASSAGE	
CHECKED BY: CMM	DATE: 08/22/2024	GROUNDING PLAN ACCESS ROAD BRIDGE AREA	
APPROVED BY: CMH	DATE: 08/22/2024	TECHNOLOGY: HYDRO	DRAWING CATEGORY: LAYOUTS
SCALE: AS NOTED	PROJECT NO.: ARL-007	DWG: EE-CG-006	REV: 0

3' 2' 1' 0 2' 4'

BAR SCALE
1/2" = 1'-0"
CHECK GRAPHIC SCALE BEFORE USING

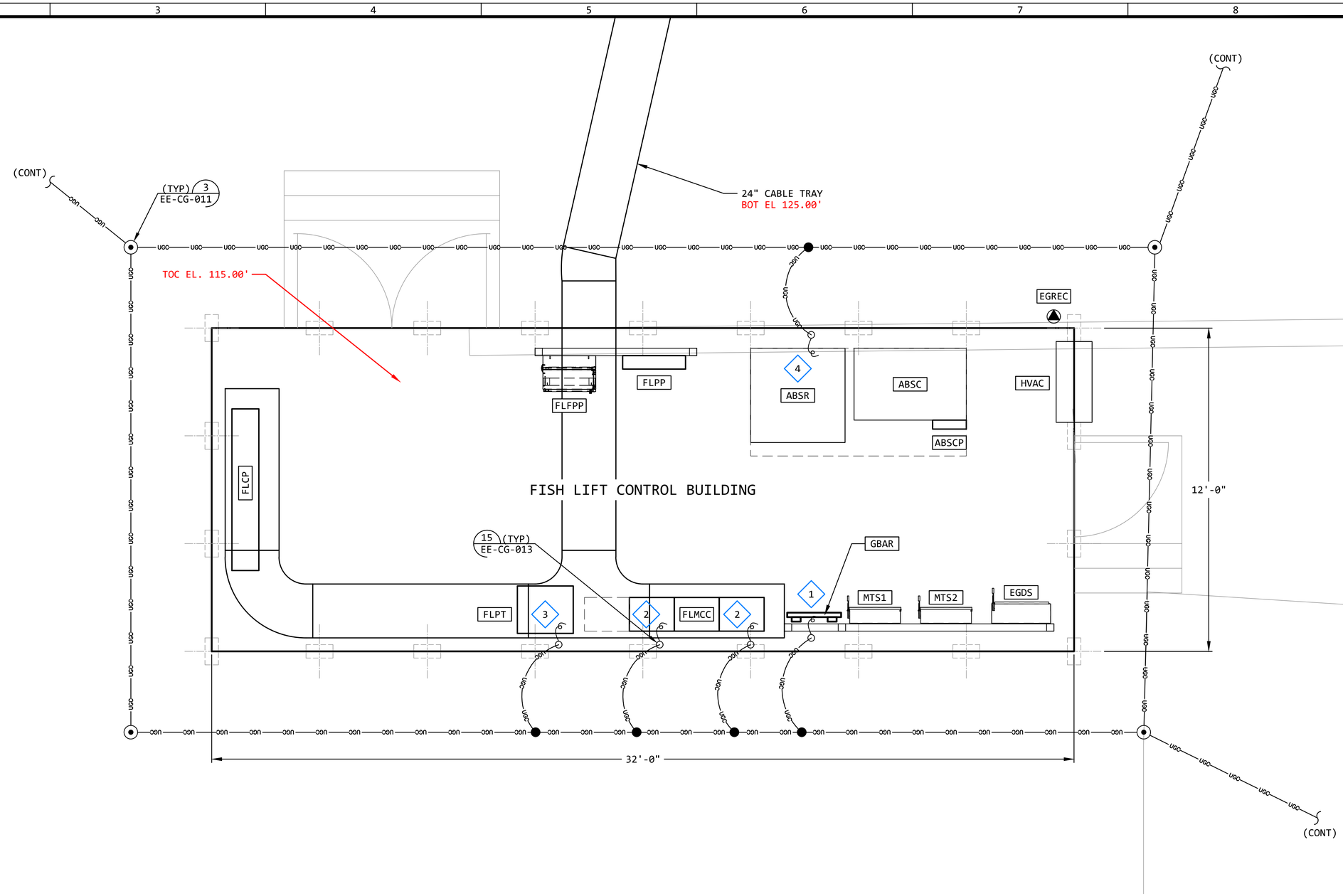

KEYED NOTES:

1. PROVIDE A PIGTAIL FOR THE GROUND BAR. BOND TO GROUND BAR AFTER EQUIPMENT INSTALLATION.
2. PROVIDE PIGTAILS FOR THE FISH LIFT MOTOR CONTROL CENTER (FLMCC). BOND TO MCC GROUND BAR AFTER EQUIPMENT INSTALLATION.
3. PROVIDE PIGTAILS FOR THE FISH LIFT POWER TRANSFORMER (FLPT). BOND TO TRANSFORMER GROUND TERMINAL AFTER EQUIPMENT INSTALLATION.
4. PROVIDE A PIGTAIL FOR THE AIR BURST SYSTEM SKID. BOND TO THE SKID GROUND BAR, AS REQUIRED, AFTER EQUIPMENT INSTALLATION.

GENERAL NOTES:

1. THE CONTRACTOR SHALL ENSURE THAT ALL ADJACENT METAL STRUCTURES, SUCH AS CATWALK FRAMES, GRATES, PIPE SUPPORTS, HOIST FRAMES AND THE LIKE, ARE BONDED TO THE BELOW GRADE GRID.

GROUNDING PLAN - FISH LIFT CONTROL BUILDING (8)

SCALE: 1/2" = 1'-0" (--)

REVISION

REV	DATE	DR	CK	AP	DESCRIPTION
0	03/28/2025	SAM	CMM	CMH	ISSUED FOR CONSTRUCTION

"Engineering with Distinction"
ELECTRICAL CONSULTANTS, INC.

THIS DRAWING IS THE PROPERTY OF ELECTRICAL CONSULTANTS, INC. AND IS TO BE USED ONLY FOR THE SPECIFIC PROJECT IDENTIFIED ON THE DRAWING. NO REVISIONS SHALL BE MADE WITHOUT THE EXPRESSED WRITTEN CONSENT OF ELECTRICAL CONSULTANTS, INC.

DRAWN BY: SAM	DATE: 08/22/2024	WOODLAND PULP, LLC WOODLAND FISH LIFT PASSAGE
CHECKED BY: CMM	DATE: 08/22/2024	GROUNDING PLAN FISH LIFT CONTROL BUILDING
APPROVED BY: CMH	DATE: 08/22/2024	TECHNOLOGY: HYDRO / DRAWING CATEGORY: LAYOUTS
SCALE: AS NOTED	PROJECT NO.: ARL-007	DWG: EE-CG-008 / REV: 0

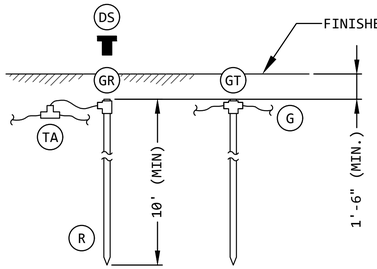

DRIVEN ROD INSTALLATION DETAIL

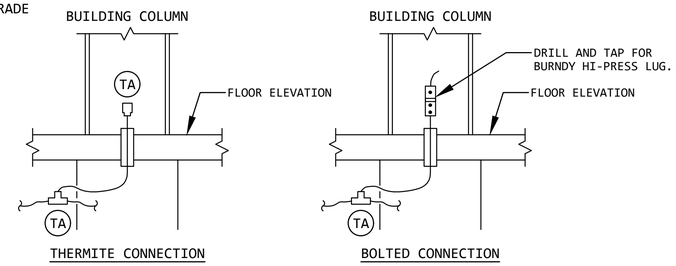

BUILDING COLUMN BOND DETAILS

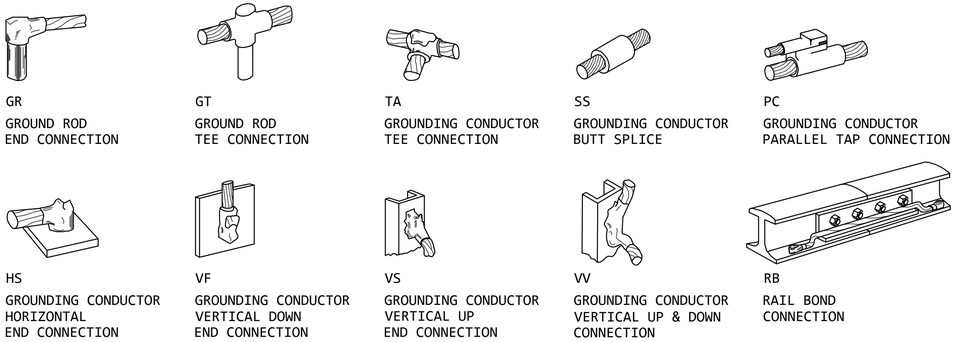

TYPICAL GROUNDING CONNECTIONS DETAIL 1

NOT TO SCALE --

TYPE	DESCRIPTION
DS	DRIVING STUDS, 3/4" ROD
G	4/0 BARE STRANDED COPPER - SOFT DRAWN
GR	4/0 CU TO 3/4" GROUND ROD END CONNECTION
GT	4/0 CU TO 3/4" GROUND ROD TEE CONNECTION
HS	4/0 CU HORIZONTAL CONNECTION
PC	4/0 CU T0 #2 AWG PARALLEL TAP CONNECTION
R	GROUND ROD, SOLID COPPER CLAD STEEL, 3/4" DIA
RB	4/0 CU RAIL BOND - TYPE J
RC	GROUND ROD END-TO-END COUPLING, 3/4" ROD
SS	4/0 CU TO 4/0 CU GROUNDING CONDUCTOR BUTT SPLICE
TA	4/0 CU TO 4/0 CU GROUNDING CONDUCTOR TEE SPLICE
VF	4/0 CU VERTICAL DOWN END CONNECTION
VS	4/0 CU VERTICAL UP END CONNECTION
VV	4/0 CU VERTICAL UP AND DOWN CONNECTION

NOTE: ALL GROUNDING CONDUCTORS SHALL BE 4/0 CU, UNLESS NOTED OTHERWISE.

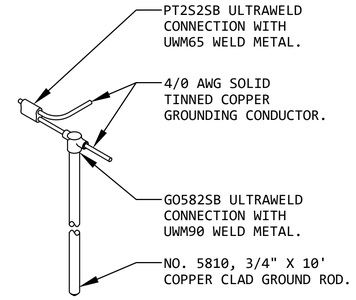

GROUND ROD DETAIL "G"

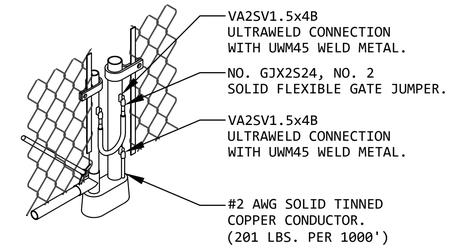

FENCE GROUNDING DETAIL "FG"

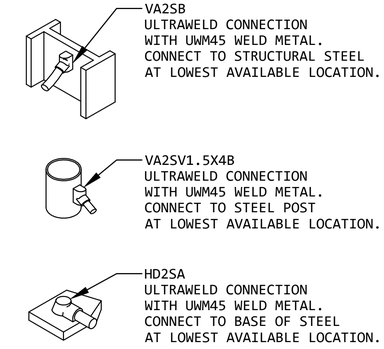

ULTRAWELD DETAILS

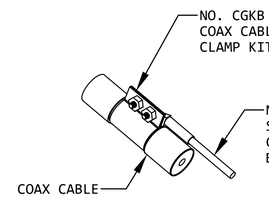

COAX GROUNDING DETAIL "CGK"

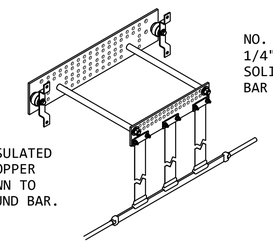

ENTRANCE PANEL DETAIL "EPK"

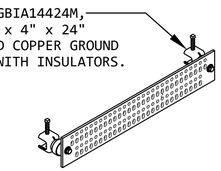

GROUND BAR DETAIL "GB"

TYPICAL GROUNDING CONNECTIONS DETAIL 2

NOT TO SCALE --

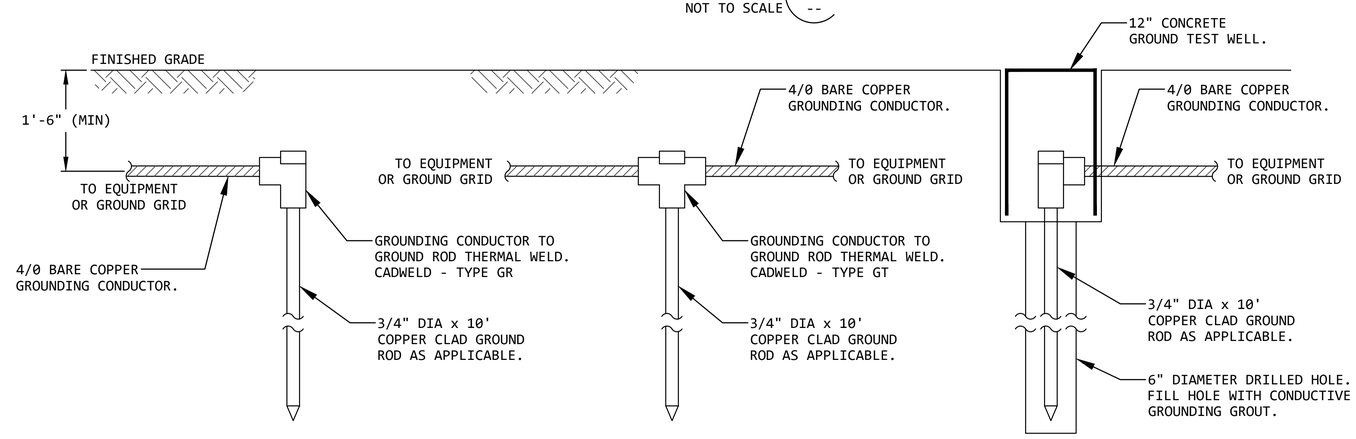

END CONNECTION DETAIL

TEE CONNECTION DETAIL

BEDROCK GROUNDING DETAIL

TYPICAL GROUND ROD DETAIL 3

NOT TO SCALE --

GENERAL NOTES:

1. ALL DETAILS SHOWN ON THIS DRAWING ARE FOR REFERENCE ONLY AND DO NOT INDICATE THEIR INCORPORATION IN THE DESIGN.

REVISION

REV	DATE	DR	CK	AP	DESCRIPTION
0	03/28/2025	SAM	CMM	CMH	ISSUED FOR CONSTRUCTION

"Engineering with Distinction"
ELECTRICAL CONSULTANTS, INC.

THIS DRAWING IS THE PROPERTY OF ELECTRICAL CONSULTANTS, INC. AND IS TO BE USED ONLY FOR THE SPECIFIC PROJECT IDENTIFIED ON THE DRAWING. NO REVISIONS SHALL BE MADE WITHOUT THE EXPRESSED WRITTEN CONSENT OF ELECTRICAL CONSULTANTS, INC.

DRAWN BY: SAM	DATE: 08/22/2024	WOODLAND PULP, LLC WOODLAND FISH LIFT PASSAGE
CHECKED BY: CMM	DATE: 08/22/2024	GROUNDING DETAILS - SHEET 1 FISH LIFT PASSAGE
APPROVED BY: CMH	DATE: 08/22/2024	TECHNOLOGY: HYDRO / DRAWING CATEGORY: LAYOUTS
SCALE: NONE	PROJECT NO.: ARL-007	DWG: EE-CG-011 / REV: 0

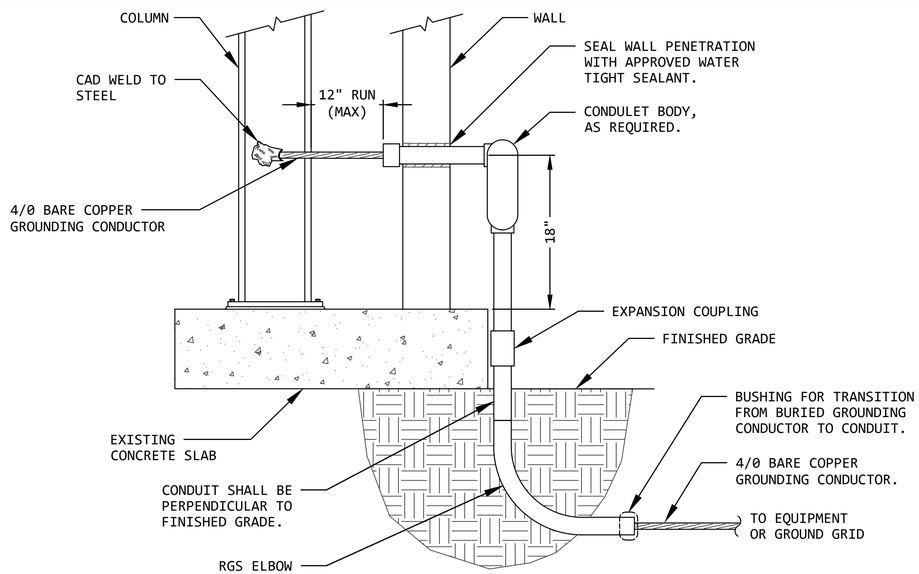

TYPICAL THRU-WALL COLUMN GROUNDING DETAIL 4

NOTE: FOR EXISTING BUILDINGS ONLY

NOT TO SCALE --

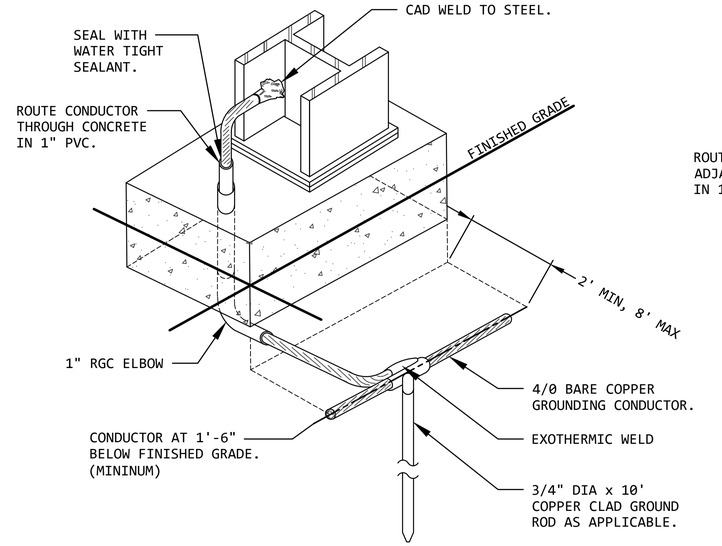

TYPICAL COLUMN GROUNDING DETAIL 5

NOT TO SCALE --

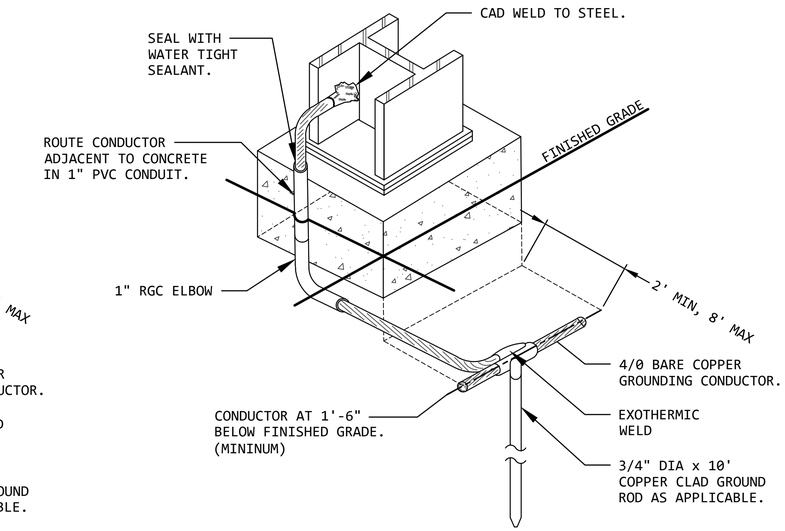

TYPICAL EXISTING PIER GROUNDING DETAIL 6

NOT TO SCALE --

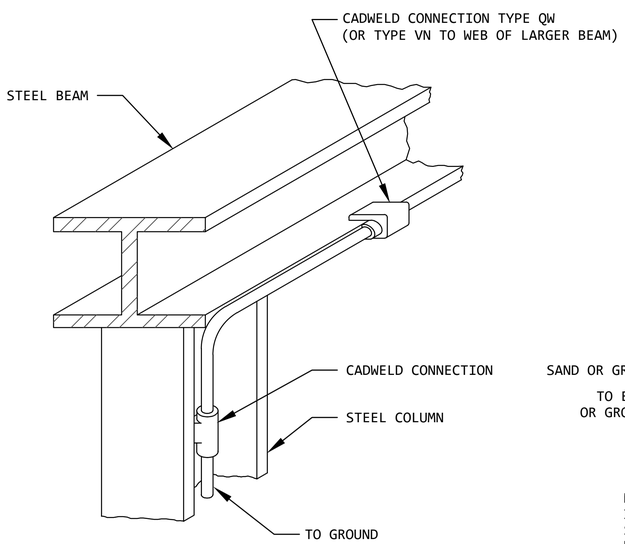

TYPICAL BUILDING STEEL GROUNDING DETAIL 7

NOT TO SCALE --

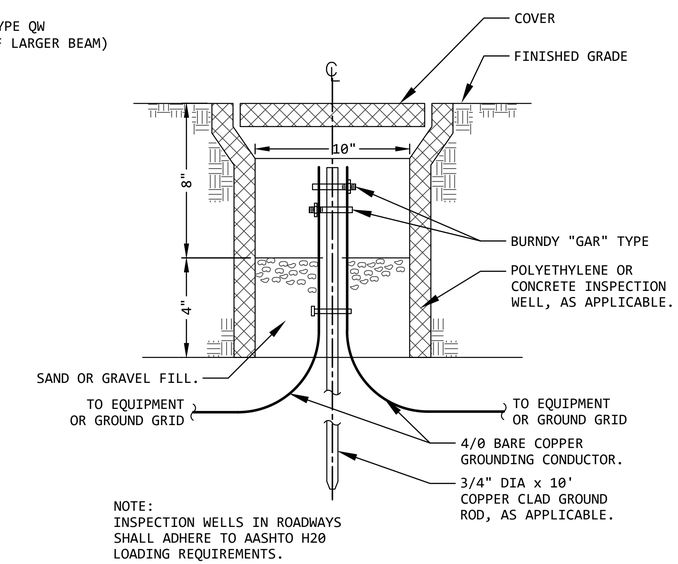

NOTE:
INSPECTION WELLS IN ROADWAYS SHALL ADHERE TO AASHTO H20 LOADING REQUIREMENTS.

TYPICAL INSPECTION WELL DETAIL 8

NOT TO SCALE --

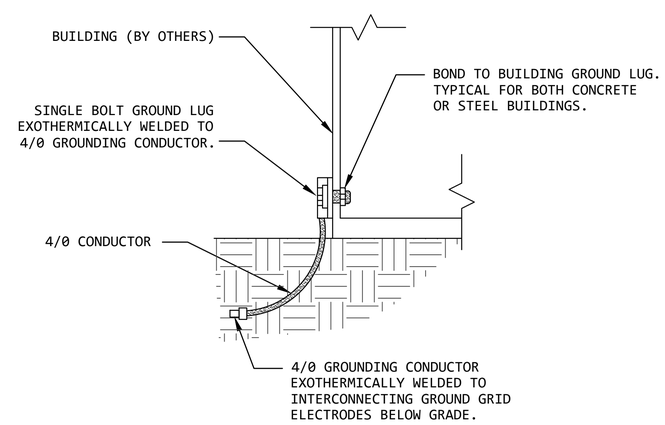

TYPICAL BUILDING GROUND DETAIL 9

NOT TO SCALE --

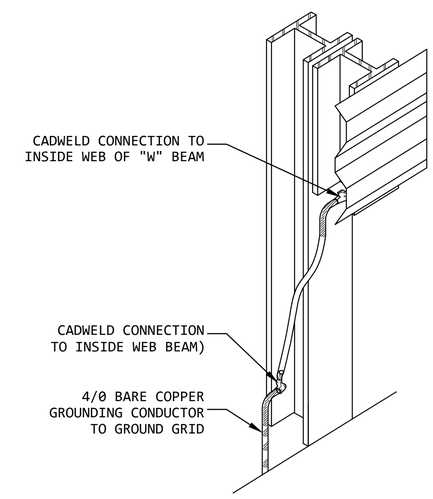

TYPICAL GUARD RAIL GROUND DETAIL 10

NOT TO SCALE --

GENERAL NOTES:

1. ALL DETAILS SHOWN ON THIS DRAWING ARE FOR REFERENCE ONLY AND DO NOT INDICATE THEIR INCORPORATION IN THE DESIGN.

REVISION

REV	DATE	DR	CK	AP	DESCRIPTION
0	03/28/2025	SAM	CMM	CMH	ISSUED FOR CONSTRUCTION

EGI "Engineering with Distinction" ELECTRICAL CONSULTANTS, INC.

THIS DRAWING IS THE PROPERTY OF ELECTRICAL CONSULTANTS, INC. AND IS TO BE USED ONLY FOR THE SPECIFIC PROJECT IDENTIFIED ON THE DRAWING. NO REVISIONS SHALL BE MADE WITHOUT THE EXPRESSED WRITTEN CONSENT OF ELECTRICAL CONSULTANTS, INC.

DRAWN BY: SAM	DATE: 08/22/2024	WOODLAND PULP, LLC WOODLAND FISH LIFT PASSAGE
CHECKED BY: CMM	DATE: 08/22/2024	GROUNDING DETAILS - SHEET 2 FISH LIFT PASSAGE
APPROVED BY: CMH	DATE: 08/22/2024	TECHNOLOGY: HYDRO / DRAWING CATEGORY: LAYOUTS
SCALE: NONE	PROJECT NO.: ARL-007	DWG: EE-CG-012 / REV: 0

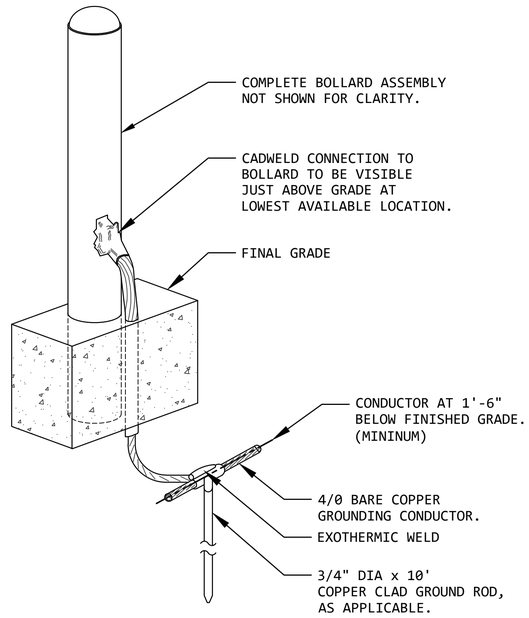

TYPICAL BOLLARD GROUNDING DETAIL 11
NOT TO SCALE --

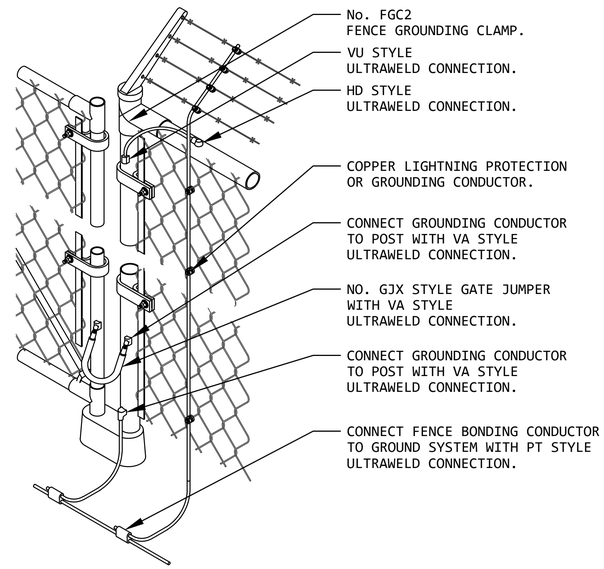

TYPICAL FENCE/GATE GROUNDING DETAIL 12
NOT TO SCALE --

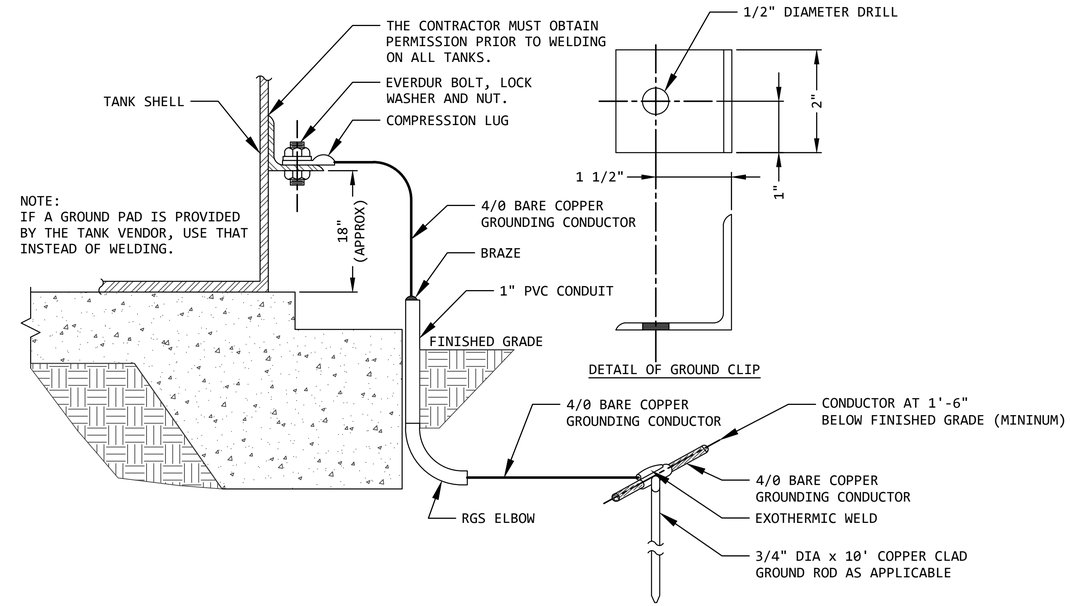

TYPICAL TANK GROUNDING DETAIL 13
NOT TO SCALE --

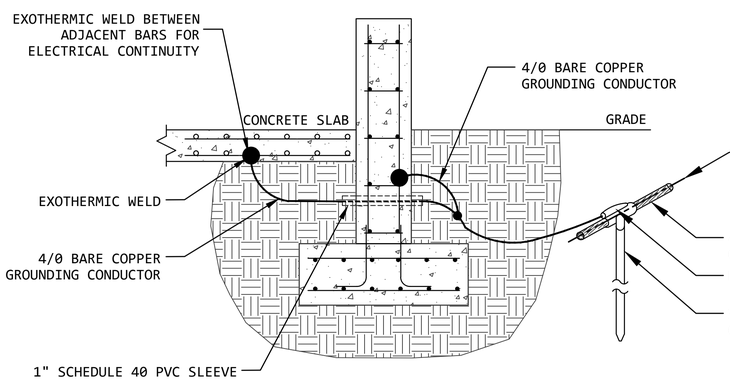

TYPICAL SLAB AND FOUNDATION GROUNDING DETAIL 14
NOT TO SCALE --

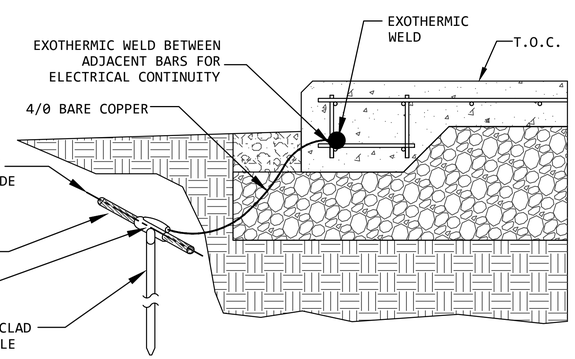

TYPICAL SLAB OR PAD GROUNDING DETAIL 15
NOT TO SCALE --

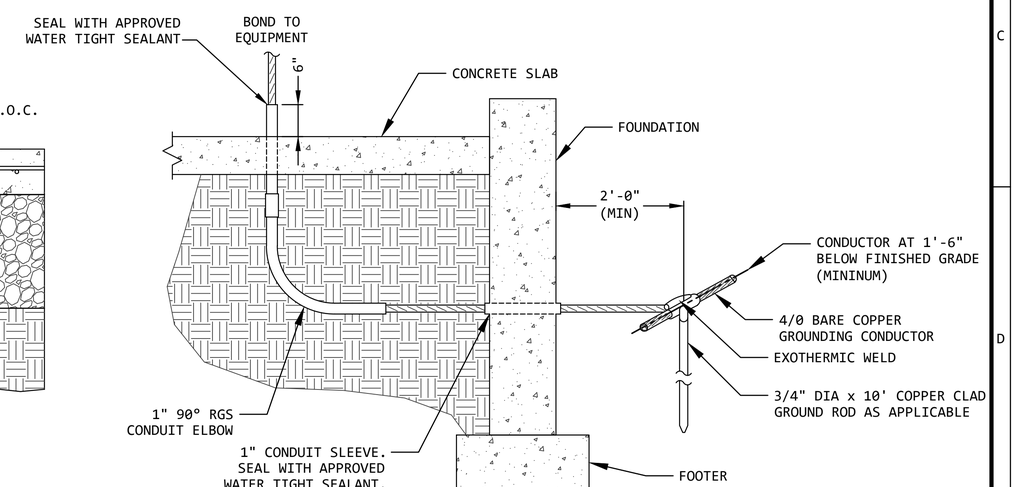

TYPICAL THROUGH SLAB/FOUNDATION GROUNDING DETAIL 16
NOT TO SCALE --

GENERAL NOTES:

1. ALL DETAILS SHOWN ON THIS DRAWING ARE FOR REFERENCE ONLY AND DO NOT INDICATE THEIR INCORPORATION IN THE DESIGN.

REVISION

REV	DATE	DR	CK	AP	DESCRIPTION
0	03/28/2025	SAM	CMM	CMH	ISSUED FOR CONSTRUCTION

ECI "Engineering with Distinction"
ELECTRICAL CONSULTANTS, INC.

THIS DRAWING IS THE PROPERTY OF ELECTRICAL CONSULTANTS, INC. AND IS TO BE USED ONLY FOR THE SPECIFIC PROJECT IDENTIFIED ON THE DRAWING. NO REVISIONS SHALL BE MADE WITHOUT THE EXPRESSED WRITTEN CONSENT OF ELECTRICAL CONSULTANTS, INC.

DRAWN BY: SAM	DATE: 08/22/2024	WOODLAND PULP, LLC WOODLAND FISH LIFT PASSAGE
CHECKED BY: CMM	DATE: 08/22/2024	GROUNDING DETAILS - SHEET 3 FISH LIFT PASSAGE
APPROVED BY: CMH	DATE: 08/22/2024	TECHNOLOGY: HYDRO / DRAWING CATEGORY: LAYOUTS
SCALE: NONE	PROJECT NO.: ARL-007	DWG: EE-CG-013 / REV: 0

GENERAL NOTES:

1. THE CABLE TRAY SYSTEM SHALL BE BASED ON B-LINE SPECIFICATIONS (EATON), OR APPROVED EQUAL.
2. CABLE TRAYS SHALL BE HEAVY DUTY ALUMINUM WITH 6" SIDE RAILS, 5" LOADING DEPTH AND HAVE 9" RUNG SPACING. ALL CABLE TRAY FITTINGS SHALL HAVE A 12" RADIUS, UNLESS NOTED OTHERWISE.
3. CABLE TRAYS SHALL BE INSTALLED AS A COMPLETE SYSTEM. FIELD BENDS OR MODIFICATIONS SHALL BE SO MADE THAT THE ELECTRICAL CONTINUITY OF THE CABLE TRAY SYSTEM AND SUPPORT FOR THE CABLES IS MAINTAINED.
4. EACH RUN OF CABLE TRAY SHALL BE COMPLETED BEFORE THE INSTALLATION OF THE CABLES.
5. PROVIDE CABLE TRAY BRIDGES AT ALL CABLE TRAY INTERSECTIONS (TEES, CROSSES AND WYES) AS REQUIRED. CABLE TRAY BRIDGES PROVIDE THE REQUIRED SEPARATION FOR THE CABLES OF VARIOUS VOLTAGE LEVELS.
6. ALL CABLE TRAY SYSTEMS SHALL BE ELECTRICALLY CONTINUOUS AND EFFECTIVELY BONDED AND GROUNDED. BOND THE CABLE TRAYS TO EACH SUPPORTING STRUCTURE.
7. THE CONTRACTOR SHALL PROVIDE A #2/0 BARE COPPER GROUNDING CONDUCTOR ALONG THE ENTIRE LENGTH OF THE CABLE TRAY.

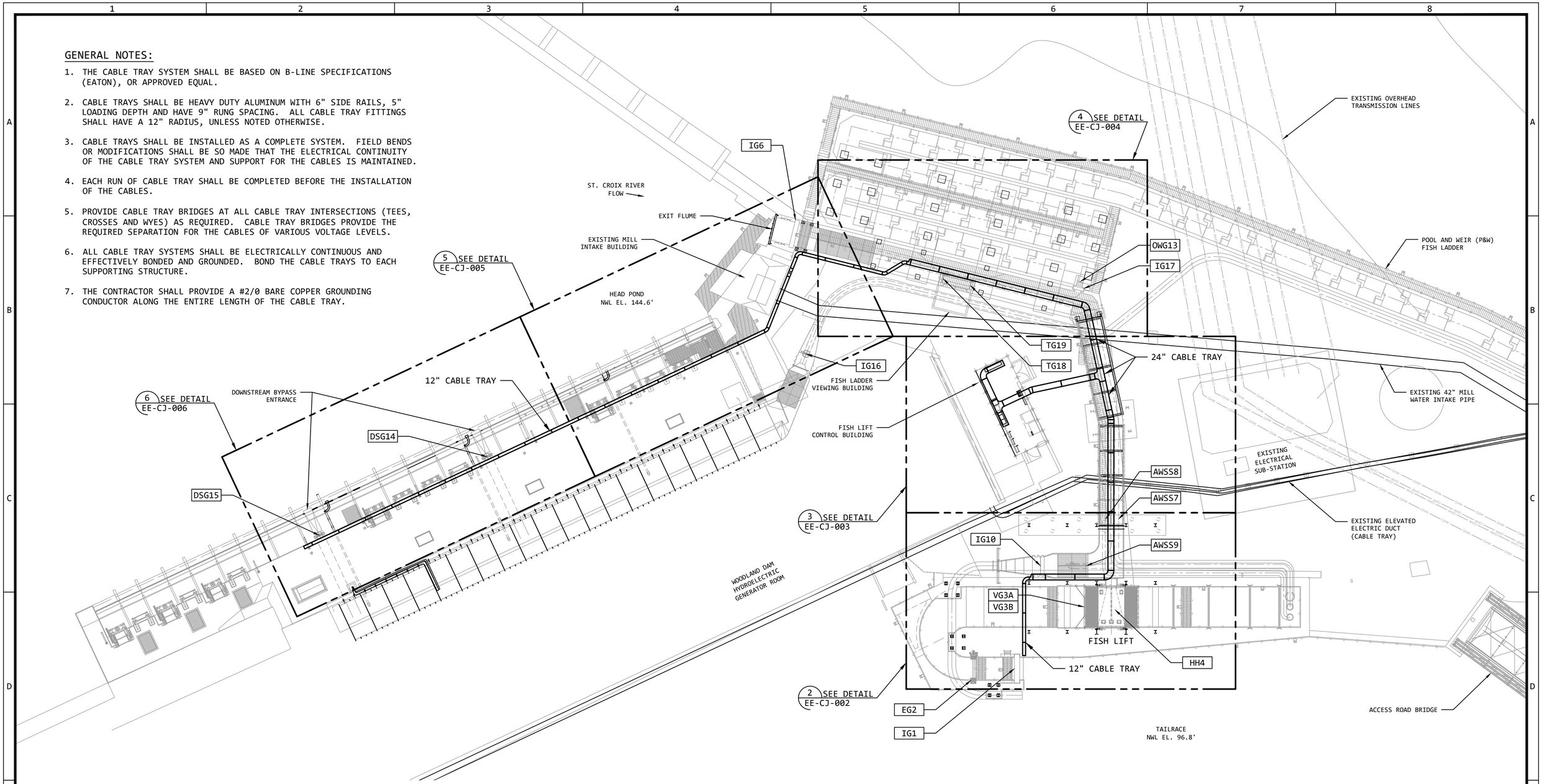

ABOVE GRADE RACEWAY PLAN - FISH LIFT PASSAGE SITE (1)

SCALE: 1/16" = 1'-0" (--)

N

16' 12' 8' 4' 0 12' 24'

BAR SCALE
1/16" = 1'-0"
CHECK GRAPHIC SCALE BEFORE USING

REVISION					
REV	DATE	DR	CK	AP	DESCRIPTION
0	03/28/2025	SAM	CMM	CMH	ISSUED FOR CONSTRUCTION

ECI "Engineering with Distinction"
ELECTRICAL CONSULTANTS, INC.

THIS DRAWING IS THE PROPERTY OF ELECTRICAL CONSULTANTS, INC. AND IS TO BE USED ONLY FOR THE SPECIFIC PROJECT IDENTIFIED ON THE DRAWING. NO REVISIONS SHALL BE MADE WITHOUT THE EXPRESSED WRITTEN CONSENT OF ELECTRICAL CONSULTANTS, INC.

DRAWN BY SAM	DATE 08/22/2024	WOODLAND PULP, LLC WOODLAND FISH LIFT PASSAGE	
CHECKED BY CMM	DATE 08/22/2024	ABOVE GRADE RACEWAY PLAN FISH LIFT PASSAGE SITE	
APPROVED BY CMH	DATE 08/22/2024	TECHNOLOGY HYDRO	DRAWING CATEGORY LAYOUTS
SCALE AS NOTED	PROJECT NO. ARL-007	DWG EE-CJ-001	REV 0

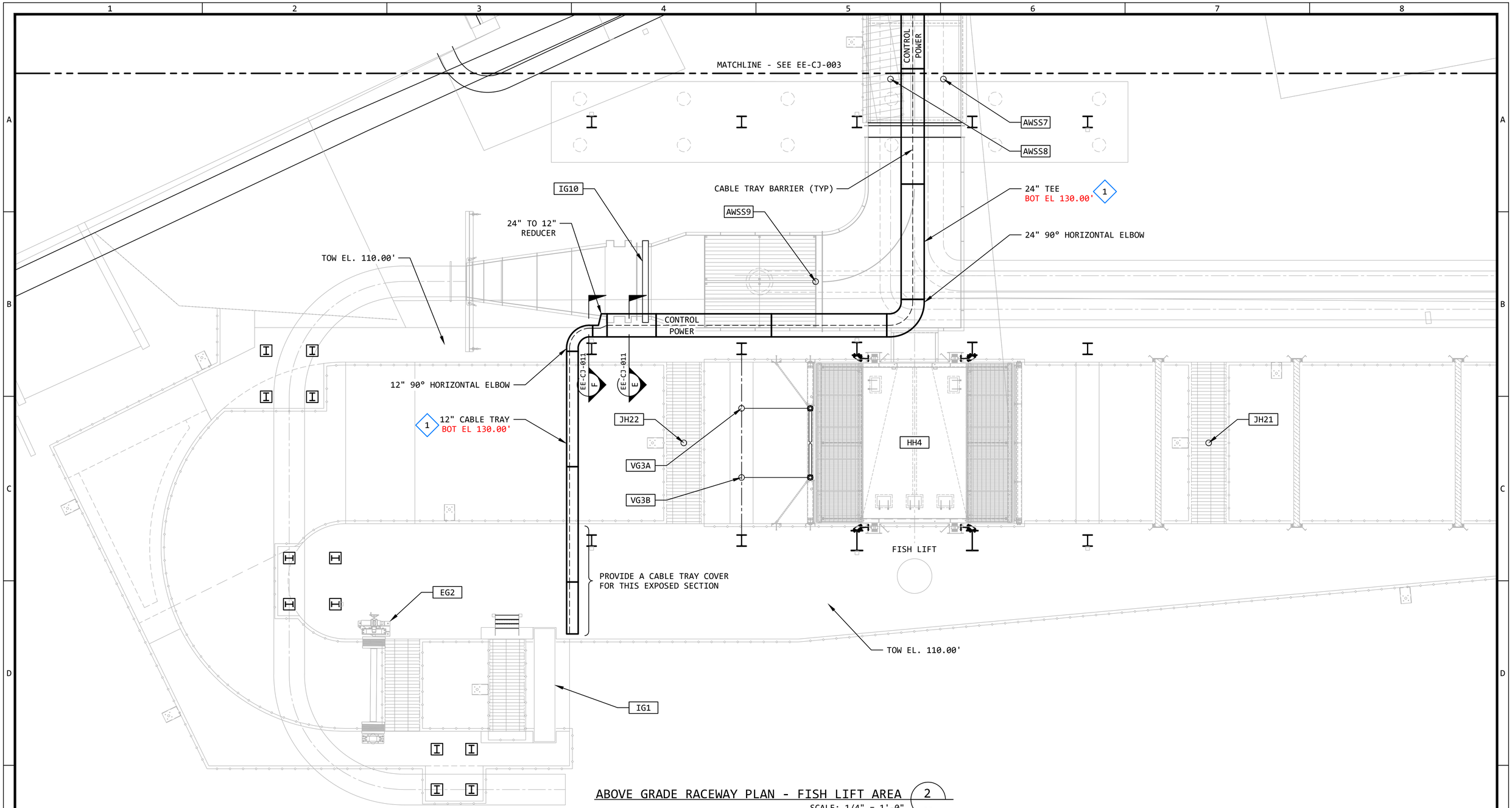

ABOVE GRADE RACEWAY PLAN - FISH LIFT AREA (2)

SCALE: 1/4" = 1'-0" (--)

KEYED NOTES:

1. THE ELEVATIONS OF THE CABLE TRAY IS YET TO BE DETERMINED. THE ELEVATIONS SHOWN (BOT EL) ARE APPROXIMATE, AND HELP TO IDENTIFY THE TOTAL SCOPE OF THE DESIGN.

N

6' 4' 2' 0 4' 8'

BAR SCALE
1/4" = 1'-0"
CHECK GRAPHIC SCALE BEFORE USING

REVISION

REV	DATE	DR	CK	AP	DESCRIPTION
0	03/28/2025	SAM	CMM	CMH	ISSUED FOR CONSTRUCTION

ECI "Engineering with Distinction"
ELECTRICAL CONSULTANTS, INC.

THIS DRAWING IS THE PROPERTY OF ELECTRICAL CONSULTANTS, INC. AND IS TO BE USED ONLY FOR THE SPECIFIC PROJECT IDENTIFIED ON THE DRAWING. NO REVISIONS SHALL BE MADE WITHOUT THE EXPRESSED WRITTEN CONSENT OF ELECTRICAL CONSULTANTS, INC.

DRAWN BY: SAM	DATE: 08/22/2024	WOODLAND PULP, LLC WOODLAND FISH LIFT PASSAGE	
CHECKED BY: CMM	DATE: 08/22/2024	ABOVE GRADE RACEWAY PLAN FISH LIFT AREA	
APPROVED BY: CMH	DATE: 08/22/2024	TECHNOLOGY: HYDRO	DRAWING CATEGORY: LAYOUTS
SCALE: AS NOTED	PROJECT NO.: ARL-007	DWG: EE-CJ-002	REV: 0

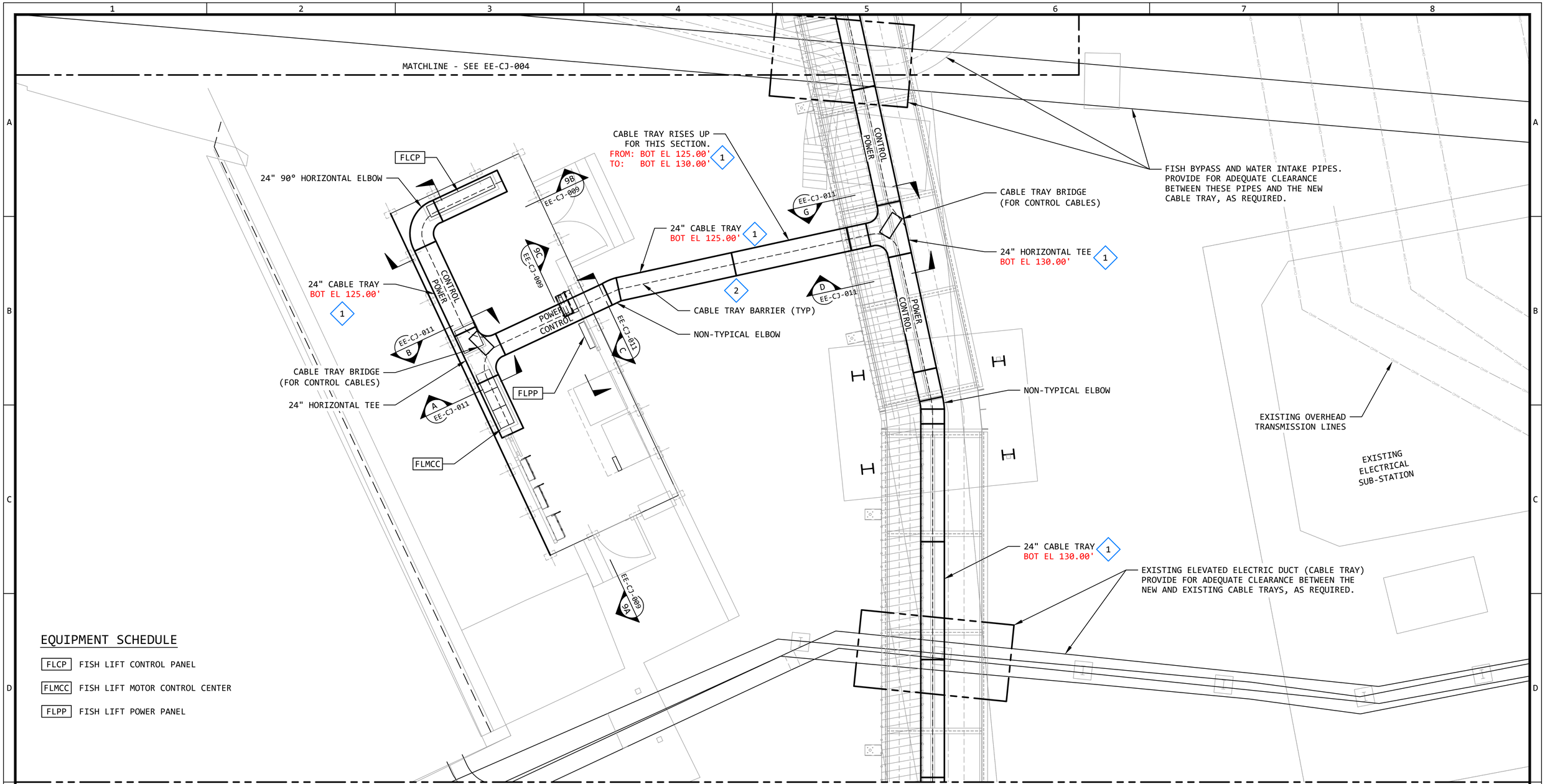

EQUIPMENT SCHEDULE

FLCP	FISH LIFT CONTROL PANEL
FLMCC	FISH LIFT MOTOR CONTROL CENTER
FLPP	FISH LIFT POWER PANEL

ABOVE GRADE RACEWAY PLAN - FISH LIFT CONTROL BUILDING (3)

SCALE: 1/4" = 1'-0" (--)

KEYED NOTES:

1. THE ELEVATIONS OF THE CABLE TRAY IS YET TO BE DETERMINED. THE ELEVATIONS SHOWN (BOT EL) ARE APPROXIMATE, AND HELP TO IDENTIFY THE TOTAL SCOPE OF THE DESIGN.
2. PROVIDE A CABLE TRAY COVER FOR THIS EXPOSED SECTION, BETWEEN THE CONTROL BUILDING AND THE FIRST CABLE TRAY TEE FITTING.

N

6' 4' 2' 0 4' 8'

BAR SCALE
1/4" = 1'-0"
CHECK GRAPHIC SCALE BEFORE USING

REVISION

REV	DATE	DR	CK	AP	DESCRIPTION
0	03/28/2025	SAM	CMM	CMH	ISSUED FOR CONSTRUCTION

EGI "Engineering with Distinction"
ELECTRICAL CONSULTANTS, INC.

THIS DRAWING IS THE PROPERTY OF ELECTRICAL CONSULTANTS, INC. AND IS TO BE USED ONLY FOR THE SPECIFIC PROJECT IDENTIFIED ON THE DRAWING. NO REVISIONS SHALL BE MADE WITHOUT THE EXPRESSED WRITTEN CONSENT OF ELECTRICAL CONSULTANTS, INC.

DRAWN BY: SAM	DATE: 08/22/2024	WOODLAND PULP, LLC WOODLAND FISH LIFT PASSAGE
CHECKED BY: CMM	DATE: 08/22/2024	ABOVE GRADE RACEWAY PLAN FISH LIFT CONTROL BUILDING AREA
APPROVED BY: CMH	DATE: 08/22/2024	TECHNOLOGY: HYDRO / DRAWING CATEGORY: LAYOUTS
SCALE: AS NOTED	PROJECT NO.: ARL-007	DWG: EE-CJ-003 / REV: 0

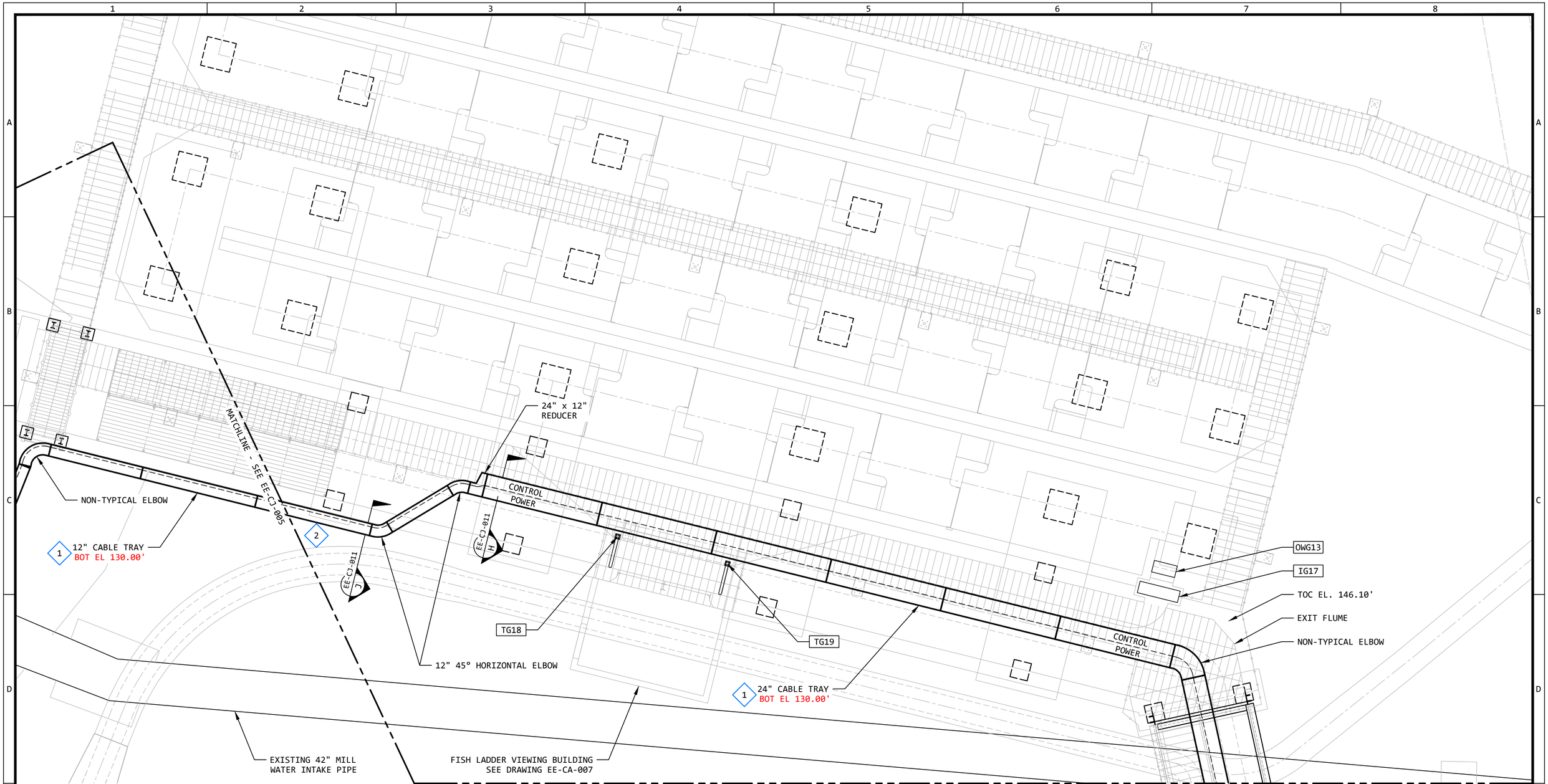

ABOVE GRADE RACEWAY PLAN - EXIT FLUME AREA (4)

SCALE: 1/4" = 1'-0" (--)

KEYED NOTES:

1. THE ELEVATIONS OF THE CABLE TRAY IS YET TO BE DETERMINED. THE ELEVATIONS SHOWN (BOT EL) ARE APPROXIMATE, AND HELP TO IDENTIFY THE TOTAL SCOPE OF THE DESIGN.
2. PROVIDE A CABLE TRAY COVER FOR THIS EXPOSED SECTION, FROM WHERE IT KICKS OUT FROM UNDER THE FLUME, ALL THE WAY TO THE END OF TRAY.

N

6' 4' 2' 0 4' 8'

BAR SCALE
1/4" = 1'-0"
CHECK GRAPHIC SCALE BEFORE USING

REVISION					
REV	DATE	DR	CK	AP	DESCRIPTION
0	03/28/2025	SAM	CMM	CMH	ISSUED FOR CONSTRUCTION

"Engineering with Distinction"
ELECTRICAL CONSULTANTS, INC.

THIS DRAWING IS THE PROPERTY OF ELECTRICAL CONSULTANTS, INC. AND IS TO BE USED ONLY FOR THE SPECIFIC PROJECT IDENTIFIED ON THE DRAWING. NO REVISIONS SHALL BE MADE WITHOUT THE EXPRESSED WRITTEN CONSENT OF ELECTRICAL CONSULTANTS, INC.

DRAWN BY: SAM	DATE: 08/22/2024	WOODLAND PULP, LLC WOODLAND FISH LIFT PASSAGE
CHECKED BY: CMM	DATE: 08/22/2024	ABOVE GRADE RACEWAY PLAN EXIT FLUME AREA
APPROVED BY: CMH	DATE: 08/22/2024	TECHNOLOGY: HYDRO / DRAWING CATEGORY: LAYOUTS
SCALE: AS NOTED	PROJECT NO.: ARL-007	DWG: EE-CJ-004 / REV: 0

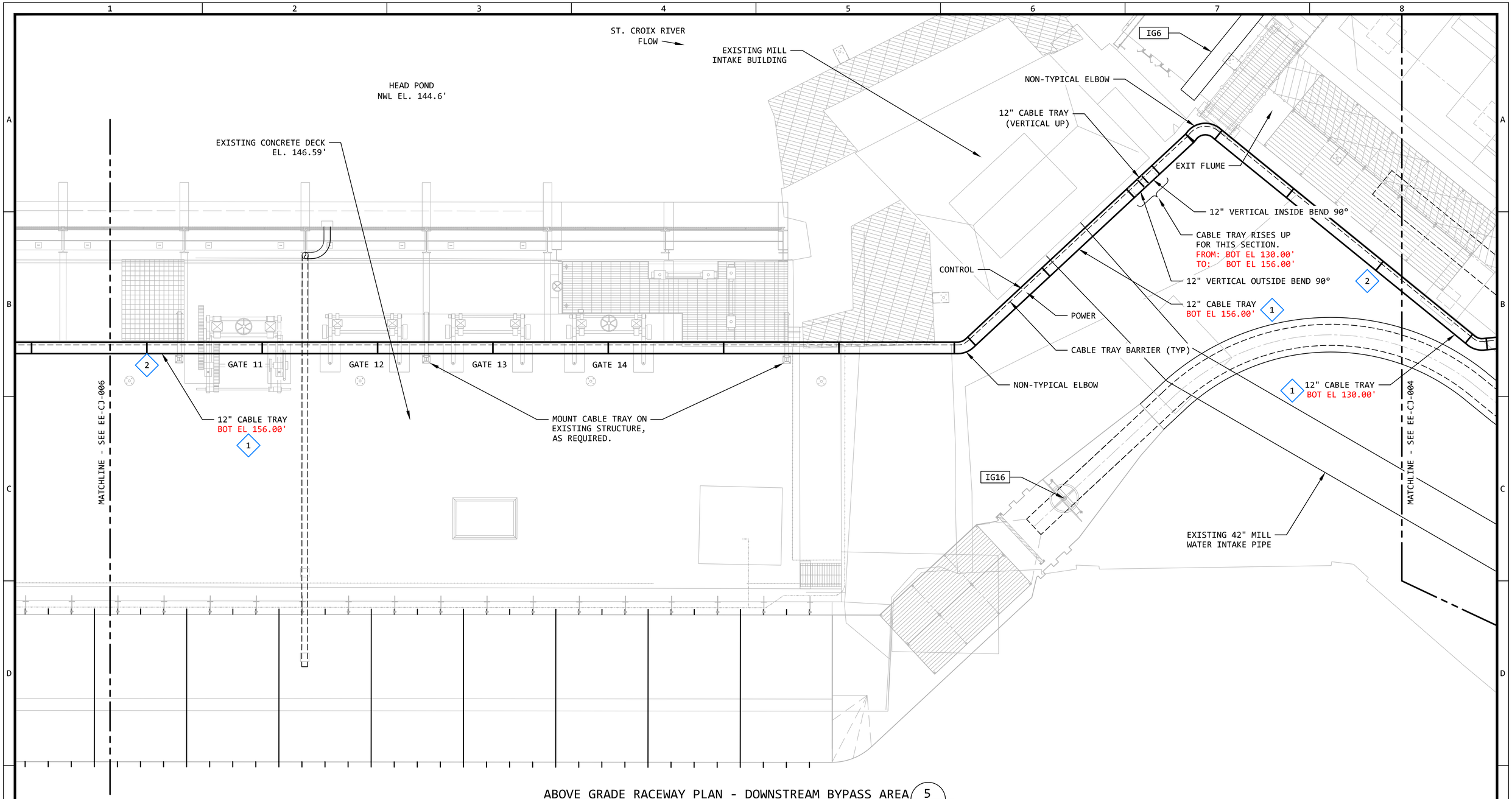

ABOVE GRADE RACEWAY PLAN - DOWNSTREAM BYPASS AREA (5)

SCALE: 1/4" = 1'-0" (--)

KEYED NOTES:

1. THE ELEVATIONS OF THE CABLE TRAY IS YET TO BE DETERMINED. THE ELEVATIONS SHOWN (BOT EL) ARE APPROXIMATE, AND HELP TO IDENTIFY THE TOTAL SCOPE OF THE DESIGN.
2. PROVIDE A CABLE TRAY COVER FOR THIS EXPOSED SECTION, FROM WHERE IT KICKS OUT FROM UNDER THE FLUME, ALL THE WAY TO THE END OF TRAY.

N

6' 4' 2' 0 4' 8'

BAR SCALE
1/4" = 1'-0"
CHECK GRAPHIC SCALE BEFORE USING

REVISION

REV	DATE	DR	CK	AP	DESCRIPTION
0	03/28/2025	SAM	CMM	CMH	ISSUED FOR CONSTRUCTION

ECI "Engineering with Distinction"
ELECTRICAL CONSULTANTS, INC.

THIS DRAWING IS THE PROPERTY OF ELECTRICAL CONSULTANTS, INC. AND IS TO BE USED ONLY FOR THE SPECIFIC PROJECT IDENTIFIED ON THE DRAWING. NO REVISIONS SHALL BE MADE WITHOUT THE EXPRESSED WRITTEN CONSENT OF ELECTRICAL CONSULTANTS, INC.

DRAWN BY: SAM	DATE: 08/22/2024	WOODLAND PULP, LLC WOODLAND FISH LIFT PASSAGE	
CHECKED BY: CMM	DATE: 08/22/2024	ABOVE GRADE RACEWAY PLAN DOWNSTREAM BYPASS AREA - SHEET 1	
APPROVED BY: CMH	DATE: 08/22/2024	TECHNOLOGY: HYDRO	DRAWING CATEGORY: LAYOUTS
SCALE: AS NOTED	PROJECT NO.: ARL-007	DWG: EE-CJ-005	REV: 0

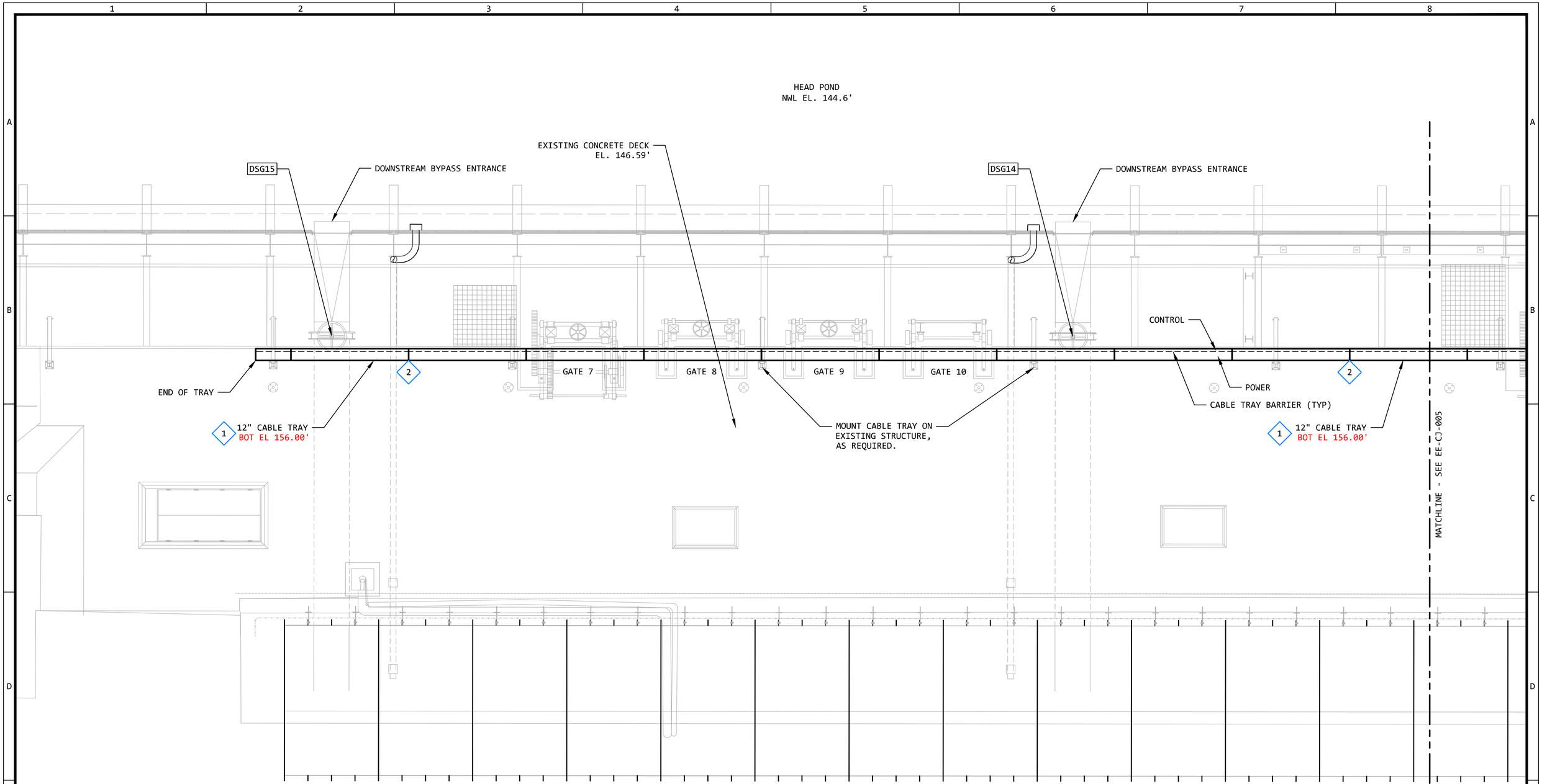

ABOVE GRADE RACEWAY PLAN - DOWNSTREAM BYPASS AREA (6)
SCALE: 1/4" = 1'-0" (--)

KEYED NOTES:

1. THE ELEVATIONS OF THE CABLE TRAY IS YET TO BE DETERMINED. THE ELEVATIONS SHOWN (BOT EL) ARE APPROXIMATE, AND HELP TO IDENTIFY THE TOTAL SCOPE OF THE DESIGN.
2. PROVIDE A CABLE TRAY COVER FOR THIS EXPOSED SECTION, FROM WHERE IT KICKS OUT FROM UNDER THE FLUME, ALL THE WAY TO THE END OF TRAY.

N

6' 4' 2' 0 4' 8'
BAR SCALE
1/4" = 1'-0"
CHECK GRAPHIC SCALE BEFORE USING

REVISION

REV	DATE	DR	CK	AP	DESCRIPTION
0	03/28/2025	SAM	CMM	CMH	ISSUED FOR CONSTRUCTION

EGI "Engineering with Distinction"
ELECTRICAL CONSULTANTS, INC.

THIS DRAWING IS THE PROPERTY OF ELECTRICAL CONSULTANTS, INC. AND IS TO BE USED ONLY FOR THE SPECIFIC PROJECT IDENTIFIED ON THE DRAWING. NO REVISIONS SHALL BE MADE WITHOUT THE EXPRESSED WRITTEN CONSENT OF ELECTRICAL CONSULTANTS, INC.

DRAWN BY: SAM	DATE: 08/22/2024	WOODLAND PULP, LLC WOODLAND FISH LIFT PASSAGE
CHECKED BY: CMM	DATE: 08/22/2024	ABOVE GRADE RACEWAY PLAN DOWNSTREAM BYPASS AREA - SHEET 2
APPROVED BY: CMH	DATE: 08/22/2024	TECHNOLOGY: HYDRO / DRAWING CATEGORY: LAYOUTS
SCALE: AS NOTED	PROJECT NO.: ARL-007	DWG: EE-CJ-006 / REV: 0

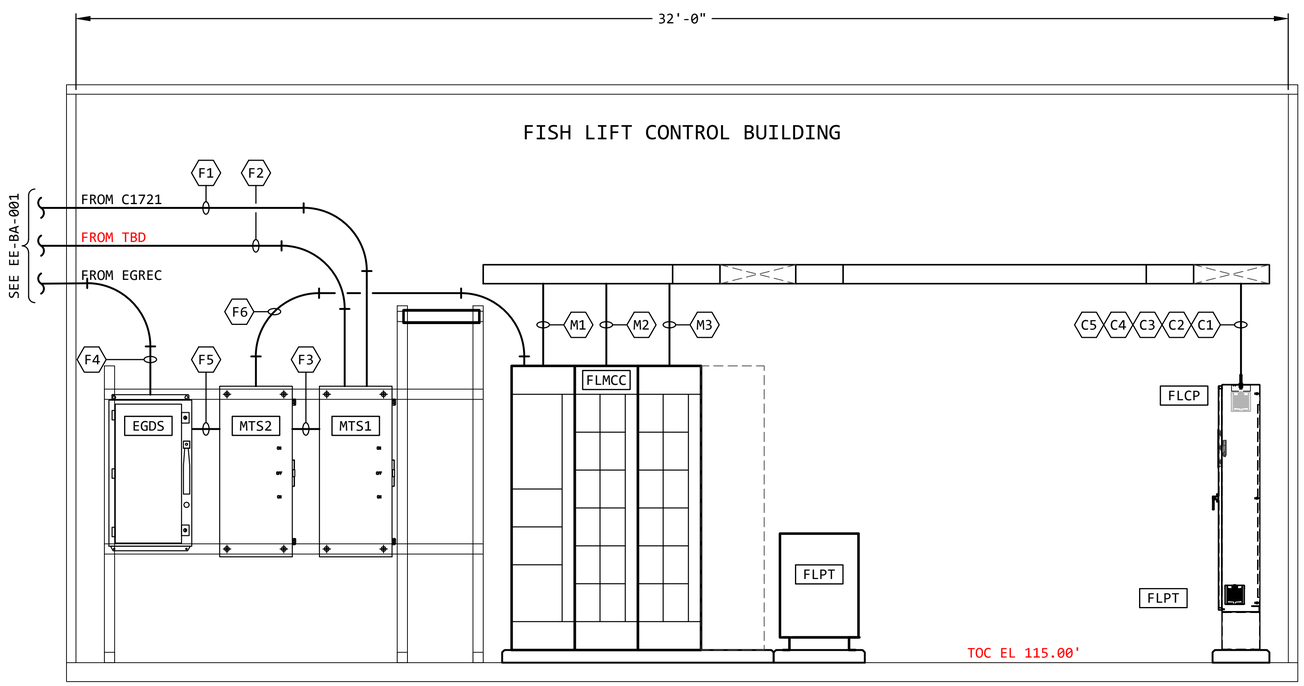

ELEVATION - INSIDE WEST WALL (9A)
SCALE: 1/2" = 1'-0" EE-CJ-001

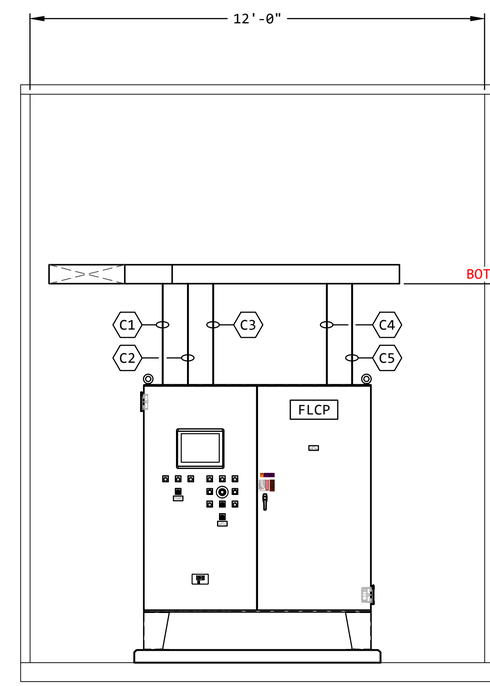

ELEVATION - INSIDE NORTH WALL (9B)
SCALE: 1/2" = 1'-0" EE-CJ-001

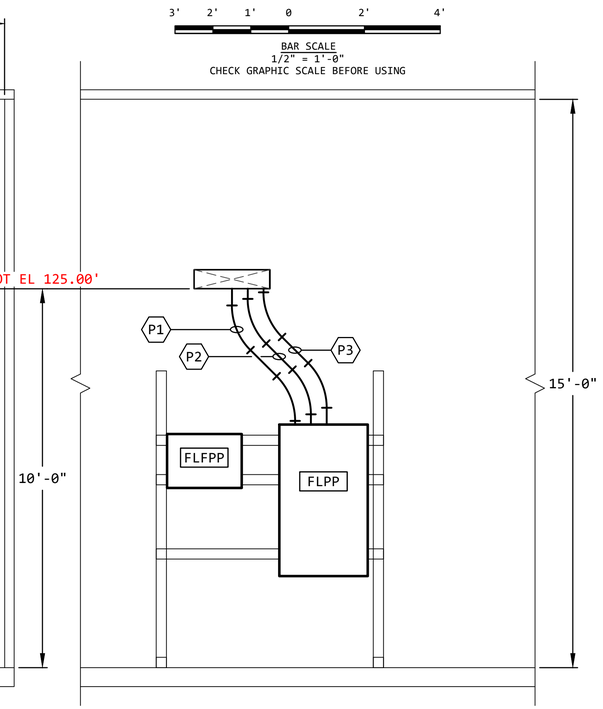

ELEVATION - INSIDE EAST WALL (9C)
SCALE: 1/2" = 1'-0" EE-CJ-001

POWER FEEDER CONDUIT SCHEDULE

ITEM	SIZE	PANEL NAME	CABLE SCHEDULE	DESCRIPTION
F1	2-3" RGS	C1721 TO MTS1-N	EE-AE-001	PRIMARY MILL SOURCE
F2	2-3" RGS	TBD TO MTS1-E	EE-AE-001	ALTERNATE MILL SOURCE
F3	2-3" RGS	MTS1-L TO MTS2-N	EE-AE-001	PRIMARY/ALTERNATE POWER SOURCE
F4	2-3" RGS	EGREC TO EGDS	EE-AE-001	EMERGENCY/BACKUP POWER SOURCE
F5	2-3" RGS	EGDS TO MTS2-E	EE-AE-001	EMERGENCY/BACKUP POWER SOURCE
F6	2-3" RGS	MTS2-L TO FLMCC	EE-AE-001	FLMCC POWER FEEDER

CONDUIT SLEEVE SCHEDULE

ITEM	SIZE	PANEL NAME	CABLE SCHEDULE	DESCRIPTION
M1	4" RGS	FLMCC, SECTION 1	EE-AE-001	SECTION 01 POWER CABLES
M2	4" RGS	FLMCC, SECTION 2	EE-AE-001	SECTION 02 POWER CABLES
M3	4" RGS	FLMCC, SECTION 3	EE-AE-001	SECTION 03 POWER CABLES
P1	3" RGS	FISH LIFT POWER PANEL	EE-AE-002	ODD NUMBERED BREAKER POWER CABLES
P2	3" RGS	FISH LIFT POWER PANEL	EE-AE-002	PANEL FEEDER FROM FLPT
P3	3" RGS	FISH LIFT POWER PANEL	EE-AE-002	EVEN NUMBERED BREAKER POWER CABLES
C1	2" RGS	FISH LIFT CONTROL PANEL	EE-AE-002	PANEL FEEDER FROM FLPP
C2	4" RGS	FISH LIFT CONTROL PANEL	EE-AE-003	LEFT SIDE I&C CABLES
C3	4" RGS	FISH LIFT CONTROL PANEL	EE-AE-004	LEFT SIDE I&C CABLES
C4	4" RGS	FISH LIFT CONTROL PANEL	EE-AE-003	RIGHT SIDE I&C CABLES
C5	4" RGS	FISH LIFT CONTROL PANEL	EE-AE-003	RIGHT SIDE I&C CABLES

GENERAL NOTES:

1. ALL INTERIOR AND EXTERIOR CONDUIT SHALL BE RIGID GALVANIZED STEEL, EXCEPT FOR CONNECTIONS TO MOTORS AND AS NOTED. THE MINIMUM SIZE CONDUIT SHALL BE 1".
2. ALL CONNECTIONS TO MOTORS SHALL BE MADE USING LIQUID TIGHT FLEXIBLE METAL CONDUIT, UNLESS NOTED OTHERWISE.
3. ALL SPARE CONDUITS SHALL BE CAPPED AT A MINIMUM OF 12" AFF OR AFG, UNLESS NOTED OTHERWISE. ALL SPARE CONDUITS SHALL BE PROVIDED WITH A FISH WIRE. EACH END OF THE FISH WIRE SHALL BE LABELED TO IDENTIFY THE LOCATION OF THE OTHER END.
4. ALL MOTOR SAFETY SWITCHES, DISCONNECTS AND LOCAL MOTOR STARTERS SHALL BE PROVIDED BY THE CONTRACTOR, UNLESS NOTED OTHERWISE.
5. SEE GENERAL NOTES ON DRAWING EE-CB-000 FOR MORE INFORMATION.

REVISION

REV	DATE	DR	CK	AP	DESCRIPTION
0	03/28/2025	SAM	CMM	CMH	ISSUED FOR CONSTRUCTION

ECI "Engineering with Distinction"
ELECTRICAL CONSULTANTS, INC.

THIS DRAWING IS THE PROPERTY OF ELECTRICAL CONSULTANTS, INC. AND IS TO BE USED ONLY FOR THE SPECIFIC PROJECT IDENTIFIED ON THE DRAWING. NO REVISIONS SHALL BE MADE WITHOUT THE EXPRESSED WRITTEN CONSENT OF ELECTRICAL CONSULTANTS, INC.

DRAWN BY: SAM	DATE: 08/22/2024	WOODLAND PULP, LLC WOODLAND FISH LIFT PASSAGE
CHECKED BY: CMM	DATE: 08/22/2024	ABOVE GRADE RACEWAY ELEVATION FISH LIFT CONTROL BUILDING
APPROVED BY: CMH	DATE: 08/22/2024	TECHNOLOGY: HYDRO / DRAWING CATEGORY: LAYOUTS
SCALE: AS NOTED	PROJECT NO.: ARL-007	DWG: EE-CJ-009 / REV: 0

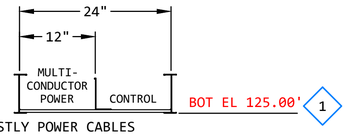

MOSTLY POWER CABLES
FROM FLMCC

CABLE TRAY SECTION A
NO SCALE EE-CJ-003

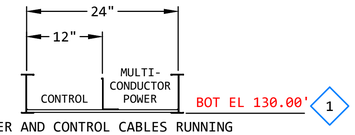

POWER AND CONTROL CABLES RUNNING
INTO THE FIELD TEE
FROM THE SOUTH BRANCH (FIELD)

CABLE TRAY SECTION D
NO SCALE EE-CJ-003

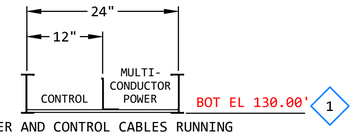

POWER AND CONTROL CABLES RUNNING
INTO THE FIELD TEE
FROM THE NORTH BRANCH (FIELD)

CABLE TRAY SECTION G
NO SCALE EE-CJ-003

HOLD - TBD

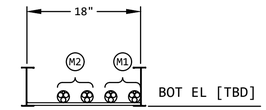

CABLE TRAY SECTION M
NO SCALE TBD

LARGE CABLE IDENTIFICATION - CABLE TRAY SECTION "M"				
CABLE ID	CABLE No.	SIZE AND TYPE	SERVICE	COMMENTS
M2	C1721-MTS1-P	(2) SETS OF: 3C #4/0 W/GND	MTS1 MANUAL TRANSFER SWITCH No.1	PRIMARY MILL SOURCE
M2	TBDA-MTS1-P	(2) SETS OF: 3C #4/0 W/GND	MTS1 MANUAL TRANSFER SWITCH No.1	ALTERNATE MILL SOURCE

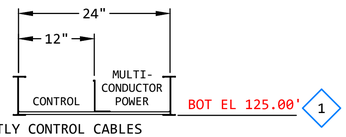

MOSTLY CONTROL CABLES
FROM FLCP

CABLE TRAY SECTION B
NO SCALE EE-CJ-003

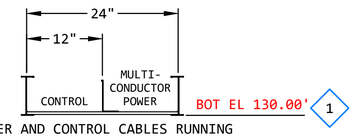

POWER AND CONTROL CABLES RUNNING
OUT OF THE CABLE TRAY REDUCER
FROM THE SOUTH BRANCH (FIELD)

CABLE TRAY SECTION E
NO SCALE EE-CJ-002

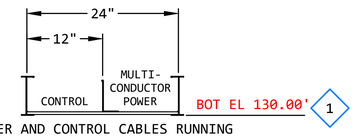

POWER AND CONTROL CABLES RUNNING
OUT OF THE CABLE TRAY REDUCER
FROM THE NORTH BRANCH (FIELD)

CABLE TRAY SECTION H
NO SCALE EE-CJ-004

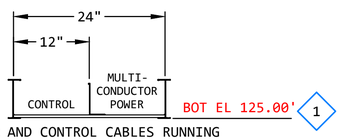

POWER AND CONTROL CABLES RUNNING
INTO THE FISH LIFT CONTROL BUILDING
FROM THE FIELD

CABLE TRAY SECTION C
NO SCALE EE-CJ-003

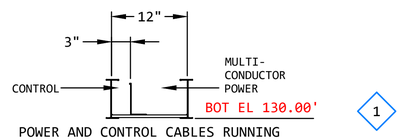

POWER AND CONTROL CABLES RUNNING
INTO THE CABLE TRAY REDUCER
FROM THE SOUTH BRANCH (FIELD)

CABLE TRAY SECTION F
NO SCALE EE-CJ-002

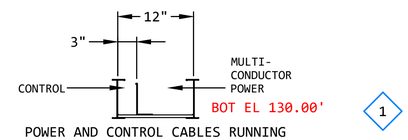

POWER AND CONTROL CABLES RUNNING
INTO THE CABLE TRAY REDUCER
FROM THE NORTH BRANCH (FIELD)

CABLE TRAY SECTION J
NO SCALE EE-CJ-004

KEYED NOTES:

1. THE ELEVATIONS OF THE CABLE TRAY ARE YET TO BE DETERMINED. THE ELEVATIONS SHOWN (BOT EL) ARE APPROXIMATE, AND HELP TO IDENTIFY THE TOTAL SCOPE OF THE DESIGN.

REVISION					
REV	DATE	DR	CK	AP	DESCRIPTION
0	03/28/2025	SAM	CMM	CMH	ISSUED FOR CONSTRUCTION

"Engineering with Distinction"
ELECTRICAL CONSULTANTS, INC.

THIS DRAWING IS THE PROPERTY OF ELECTRICAL CONSULTANTS, INC. AND IS TO BE USED ONLY FOR THE SPECIFIC PROJECT IDENTIFIED ON THE DRAWING. NO REVISIONS SHALL BE MADE WITHOUT THE EXPRESSED WRITTEN CONSENT OF ELECTRICAL CONSULTANTS, INC.

DRAWN BY SAM	DATE 08/22/2024	WOODLAND PULP, LLC WOODLAND FISH LIFT PASSAGE
CHECKED BY CMM	DATE 08/22/2024	CABLE TRAY SECTIONS FISH LIFT PASSAGE
APPROVED BY CMH	DATE 08/22/2024	TECHNOLOGY: HYDRO / DRAWING CATEGORY: LAYOUTS
SCALE: NONE	PROJECT NO. ARL-007	DWG EE-CJ-011 / REV 0

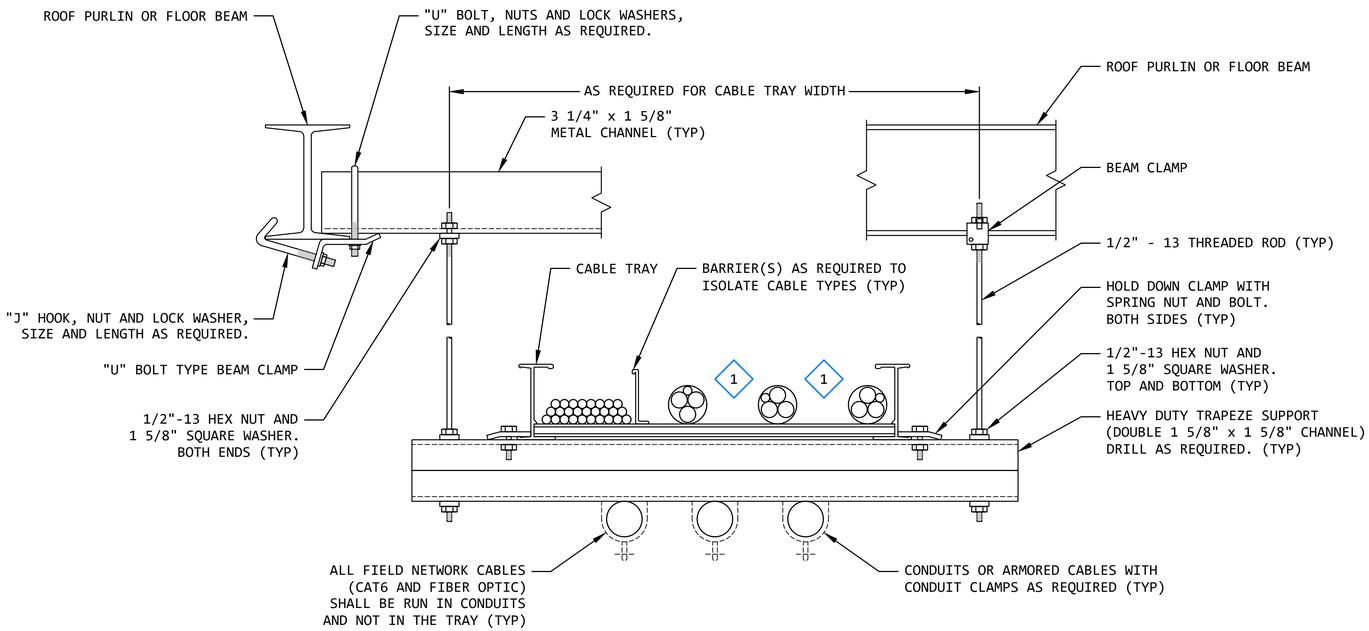

TYPICAL CABLE TRAY MOUNTING DETAIL 12
NO SCALE --

KEYED NOTES:

1. ALL CABLES #4/0 OR LARGER SHALL BE INSTALLED IN A SINGLE LAYER, AND NO OTHER CABLES SHALL BE PLACED ON THEM. MAINTAIN THE REQUIRED MINIMUM OF ONE CABLE DIAMETER SPACING OF ALL CABLES #4/0 OR LARGER, AS REQUIRED.

REVISION

REV	DATE	DR	CK	AP	DESCRIPTION
0	03/28/2025	SAM	CMM	CMH	ISSUED FOR CONSTRUCTION

EGI "Engineering with Distinction"
ELECTRICAL CONSULTANTS, INC.

THIS DRAWING IS THE PROPERTY OF ELECTRICAL CONSULTANTS, INC. AND IS TO BE USED ONLY FOR THE SPECIFIC PROJECT IDENTIFIED ON THE DRAWING. NO REVISIONS SHALL BE MADE WITHOUT THE EXPRESSED WRITTEN CONSENT OF ELECTRICAL CONSULTANTS, INC.

DRAWN BY: SAM	DATE: 08/22/2024	WOODLAND PULP, LLC WOODLAND FISH LIFT PASSAGE	
CHECKED BY: CMM	DATE: 08/22/2024	CABLE TRAY DETAILS FISH LIFT PASSAGE	
APPROVED BY: CMH	DATE: 08/22/2024	TECHNOLOGY: HYDRO	DRAWING CATEGORY: LAYOUTS
SCALE: NONE	PROJECT NO.: ARL-007	DWG: EE-CJ-012	REV: 0

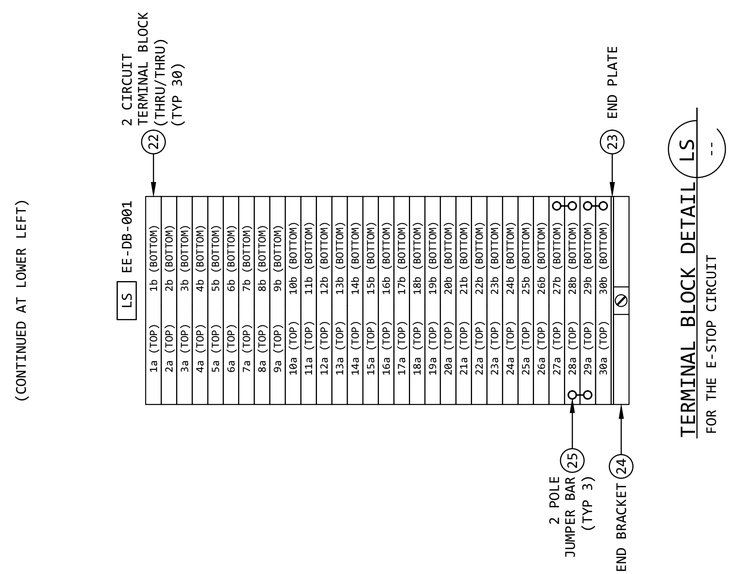

TERMINAL BLOCK DETAIL LS --
FOR THE E-STOP CIRCUIT

BOTTOM OF PANEL

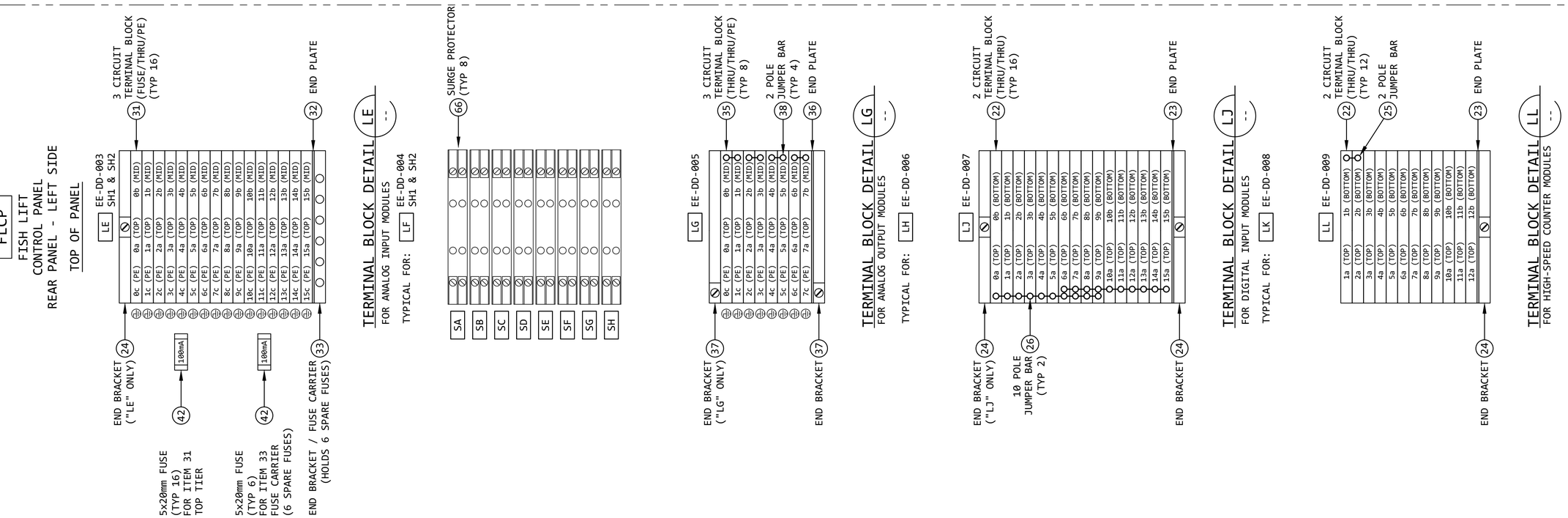

REVISION

REV	DATE	DR	CK	AP	DESCRIPTION
0	03/28/2025	SAM	CMM	CMH	ISSUED FOR CONSTRUCTION

ECI "Engineering with Distinction"
ELECTRICAL CONSULTANTS, INC.

THIS DRAWING IS THE PROPERTY OF ELECTRICAL CONSULTANTS, INC. AND IS TO BE USED ONLY FOR THE SPECIFIC PROJECT IDENTIFIED ON THE DRAWING. NO REVISIONS SHALL BE MADE WITHOUT THE EXPRESSED WRITTEN CONSENT OF ELECTRICAL CONSULTANTS, INC.

DRAWN BY: SAM	DATE: 02/22/2024	WOODLAND PULP, LLC WOODLAND FISH LIFT PASSAGE
CHECKED BY: CMM	DATE: 02/22/2024	TERMINAL BLOCK DEVELOPMENT - LEFT SIDE FISH LIFT CONTROL PANEL (FLCP)
APPROVED BY: CMH	DATE: 02/22/2024	TECHNOLOGY: HYDRO / DRAWING CATEGORY: LAYOUTS
SCALE: NONE	PROJECT NO.: ARL-007	DWG: EE-CK-001 / REV: 0

FLCP

FISH LIFT
CONTROL PANEL
REAR PANEL - RIGHT SIDE

TOP OF PANEL

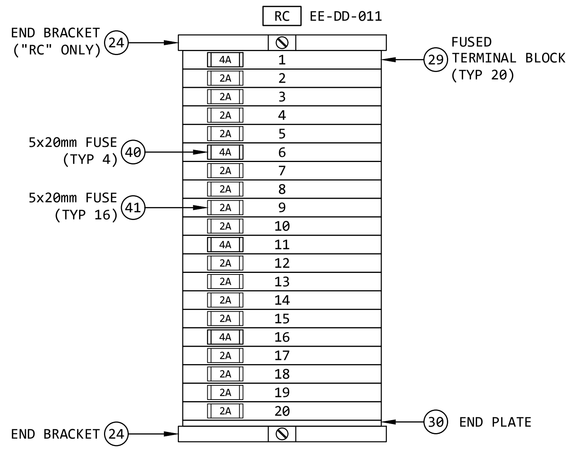

TERMINAL BLOCK DETAIL RC --

FOR RELAY OUTPUT MODULES
WIRED WITHOUT ISOLATION RELAYS

TYPICAL FOR: RD EE-DD-012
RE EE-DD-013

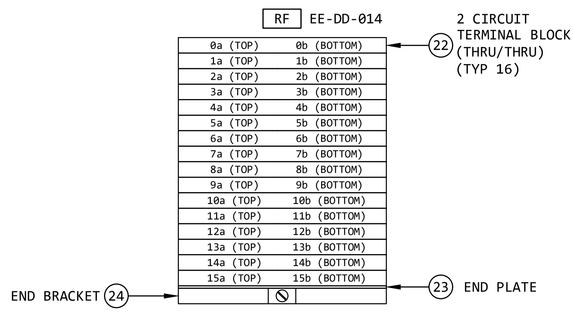

TERMINAL BLOCK DETAIL RF --

FOR RELAY OUTPUT MODULES
WIRED WITH ISOLATION RELAYS

RG (FUTURE)

NOTE:
LEAVE ADEQUATE SPACE TO
INSTALL TERMINAL BLOCKS
SIMILAR TO RF (ABOVE)
OR TO RH (BELOW).

TERMINAL BLOCK DETAIL RG --

FOR FUTURE MODULE [TBD]

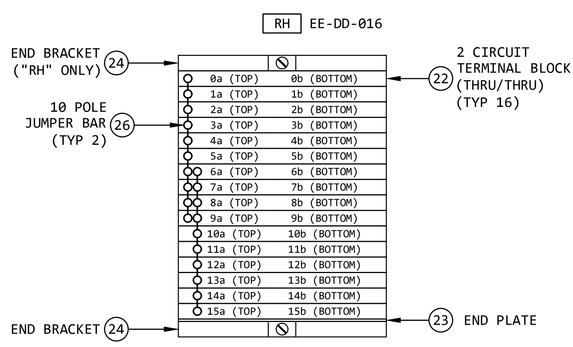

TERMINAL BLOCK DETAIL RH --

FOR DIGITAL INPUT MODULES

TYPICAL FOR: RJ EE-DD-017
RK EE-DD-018
RL EE-DD-019

BOTTOM OF PANEL

REV	DATE	DR	CK	AP	DESCRIPTION
0	03/28/2025	SAM	CMM	CMH	ISSUED FOR CONSTRUCTION

REVISION

ELECTRICAL CONSULTANTS, INC.
"Engineering with Distinction"

THIS DRAWING IS THE PROPERTY OF ELECTRICAL CONSULTANTS, INC. AND IS TO BE USED ONLY FOR THE SPECIFIC PROJECT IDENTIFIED ON THE DRAWING. NO REVISIONS SHALL BE MADE WITHOUT THE EXPRESSED WRITTEN CONSENT OF ELECTRICAL CONSULTANTS, INC.

DRAWN BY: SAM	CHECKED BY: CMM	APPROVED BY: CMH
DATE: 02/22/2024	DATE: 02/22/2024	DATE: 02/22/2024
SCALE: NONE		

WOODLAND PULP, LLC
WOODLAND FISH LIFT PASSAGE
TERMINAL BLOCK DEVELOPMENT - RIGHT SIDE
FISH LIFT CONTROL PANEL (FLCP)

TECHNOLOGY: HYDRO
DRAWING CATEGORY: LAYOUTS
PROJECT NO.: ARL-007
DWG: EE-CK-002
REV: 0

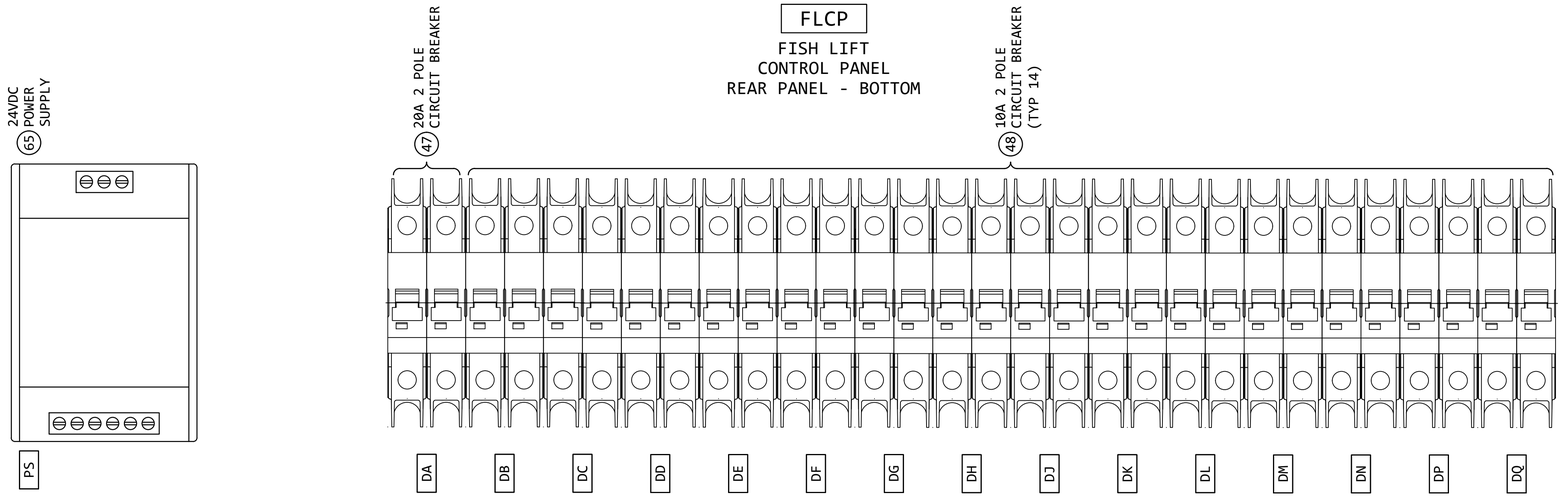

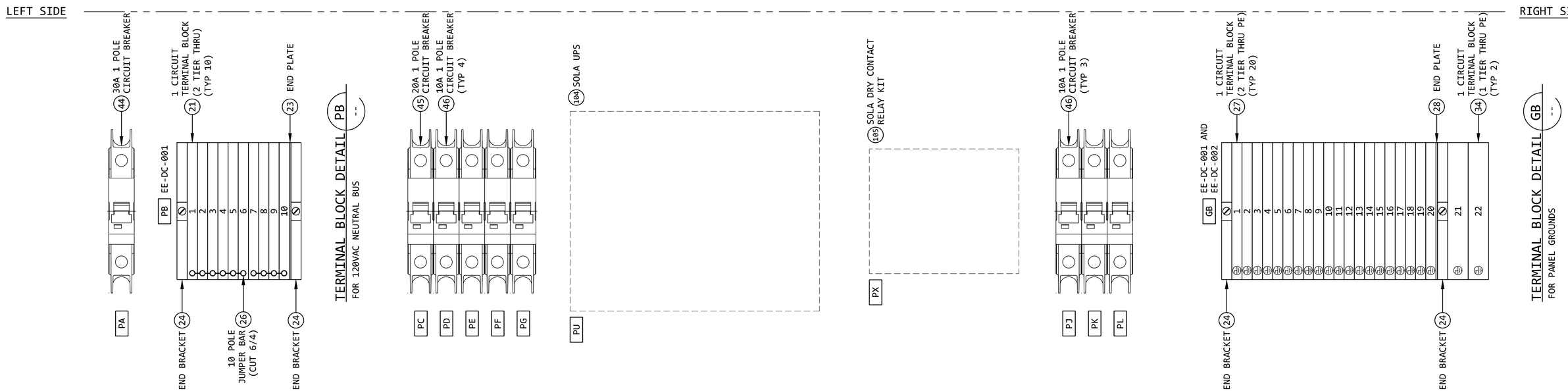

REVISION

REV	DATE	DR	CK	AP	DESCRIPTION
0	03/28/2025	SAM	CMM	CMH	ISSUED FOR CONSTRUCTION

ELECTRICAL CONSULTANTS, INC.
"Engineering with Distinction"

THIS DRAWING IS THE PROPERTY OF ELECTRICAL CONSULTANTS, INC. AND IS TO BE USED ONLY FOR THE SPECIFIC PROJECT IDENTIFIED ON THE DRAWING. NO REVISIONS SHALL BE MADE WITHOUT THE EXPRESSED WRITTEN CONSENT OF ELECTRICAL CONSULTANTS, INC.

DRAWN BY: SAM	DATE: 02/22/2024	WOODLAND PULP, LLC WOODLAND FISH LIFT PASSAGE
CHECKED BY: CMM	DATE: 02/22/2024	TERMINAL BLOCK DEVELOPMENT - BOTTOM FISH LIFT CONTROL PANEL (FLCP)
APPROVED BY: CMH	DATE: 02/22/2024	TECHNOLOGY: HYDRO / DRAWING CATEGORY: LAYOUTS
SCALE: NONE	PROJECT NO.: ARL-007	DWG: EE-CK-003 / REV: 0

GENERAL NOTES:

1. THE COMPLETED INSTALLATION SHALL MEET NFPA 780, STANDARD FOR THE INSTALLATION OF LIGHTNING PROTECTION SYSTEMS.
2. ALUMINUM LIGHTNING PROTECTION SYSTEM COMPONENTS SHALL NOT BE MOUNTED TO COPPER SURFACES. COPPER COMPONENTS SHALL BE USED TO AVOID ELECTROLYTIC CORROSION.
3. AIR TERMINALS ARE TO BE LOCATED AS SHOWN. THEY ARE TO BE A MAXIMUM OF 24" FROM THE ROOF EDGE AND PROJECT A MINIMUM OF 10" ABOVE THE PROTECTED EDGE. THE SPACING BETWEEN AIR TERMINALS ARE NOT TO EXCEED 20 FEET.
4. ALL LIGHTING CONDUCTORS ARE TO MAINTAIN A HORIZONTAL OR DOWNWARD PATH. ALL BENDS IN THE CONDUCTOR SHALL HAVE A RADIUS BEND OF 8 INCHES OR GREATER, AND SHALL HAVE AN ANGLE BEND OF 90 DEGREES OR GREATER.

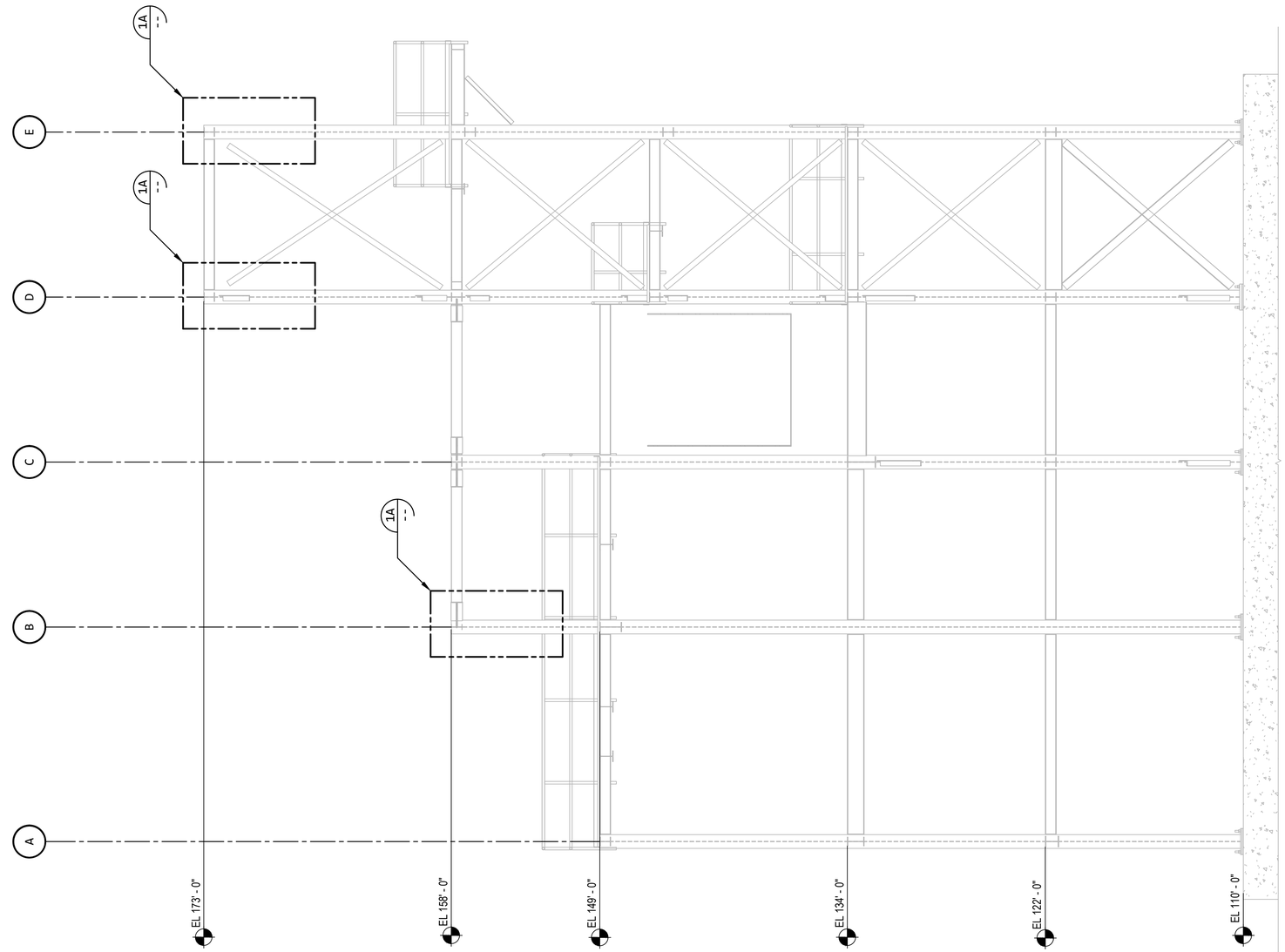

LIGHTNING PROTECTION - ELEVATION AT COLUMN LINE 1 (1 / --)
SCALE: 1/4" = 1'-0"

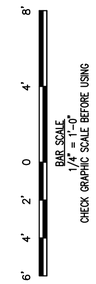

A — CLASS II BLUNT AIR TERMINAL.
1/2" DIA, 15" LONG, SOLID COPPER
EAST COAST LIGHTNING EQUIPMENT
ITEM #AT115CB

B — NARROW VERTICAL SIDE MOUNT.
CAST BRONZE BASE, FOR 1/2" AIR TERMINALS
EAST COAST LIGHTNING EQUIPMENT
ITEM #BB14B-1/2
MOUNT AS HIGH ON COLUMN AS POSSIBLE.

C — BONDING CONDUCTOR.
115KCMILL, MINIMUM 15AWG/STRAND
(USED TO TIE AIR TERMINAL MOUNT TO BEAM CLAMP)

D — 8 SQUARE INCH BEAM CLAMP.
CAST BRONZE BONDING PLATE
EAST COAST LIGHTNING EQUIPMENT
ITEM #BF18B
REMOVE ALL NON-CONDUCTIVE MATERIAL
ON COLUMN PRIOR TO INSTALLATION.

LIGHTNING PROTECTION DETAIL (1A / --)
SCALE: NONE

REVISION

REV	DATE	DR	CK	AP	DESCRIPTION
0	03/28/2025	SAM	CMM	CMH	ISSUED FOR CONSTRUCTION

ECI "Engineering with Distinction"
ELECTRICAL CONSULTANTS, INC.

THIS DRAWING IS THE PROPERTY OF ELECTRICAL CONSULTANTS, INC. AND IS TO BE USED ONLY FOR THE SPECIFIC PROJECT IDENTIFIED ON THE DRAWING. NO REVISIONS SHALL BE MADE WITHOUT THE EXPRESSED WRITTEN CONSENT OF ELECTRICAL CONSULTANTS, INC.

DRAWN BY: SAM	DATE: 08/22/2024	WOODLAND PULP, LLC WOODLAND FISH LIFT PASSAGE	
CHECKED BY: CMM	DATE: 08/22/2024	LIGHTNING PROTECTION ELEVATION AT COLUMN LINE 1	
APPROVED BY: CMH	DATE: 08/22/2024	TECHNOLOGY: HYDRO	DRAWING CATEGORY: LAYOUTS
SCALE: NONE		PROJECT NO.: ARL-007 / DWG: EE-CL-001	REV: 0

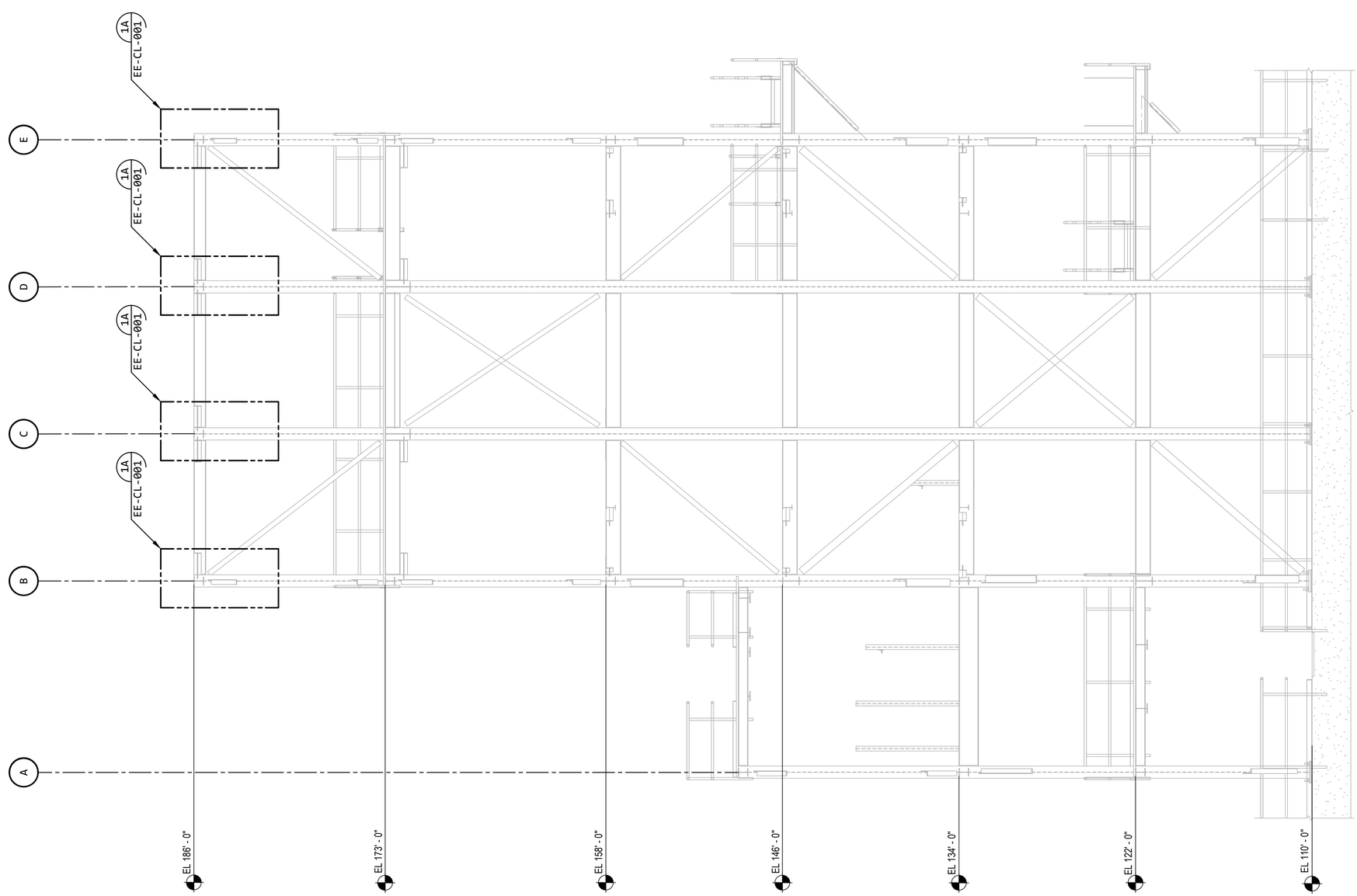

6' 4' 2' 0 4' 8'

BAR SCALE
1/4" = 1'-0"
CHECK GRAPHIC SCALE BEFORE USING

LIGHTNING PROTECTION - ELEVATION AT COLUMN LINE 2 (2 / --)

SCALE: 1/4" = 1'-0"

REVISION					
REV	DATE	DR	CK	AP	DESCRIPTION
0	03/28/2025	SAM	CMM	CMH	ISSUED FOR CONSTRUCTION

"Engineering with Distinction"
ELECTRICAL CONSULTANTS, INC.

THIS DRAWING IS THE PROPERTY OF ELECTRICAL CONSULTANTS, INC. AND IS TO BE USED ONLY FOR THE SPECIFIC PROJECT IDENTIFIED ON THE DRAWING. NO REVISIONS SHALL BE MADE WITHOUT THE EXPRESSED WRITTEN CONSENT OF ELECTRICAL CONSULTANTS, INC.

DRAWN BY: SAM	DATE: 08/22/2024	WOODLAND PULP, LLC WOODLAND FISH LIFT PASSAGE
CHECKED BY: CMM	DATE: 08/22/2024	LIGHTNING PROTECTION ELEVATION AT COLUMN LINE 2
APPROVED BY: CMH	DATE: 08/22/2024	TECHNOLOGY: HYDRO / DRAWING CATEGORY: LAYOUTS
SCALE: NONE	PROJECT NO.: ARL-007	DWG: EE-CL-002 / REV: 0

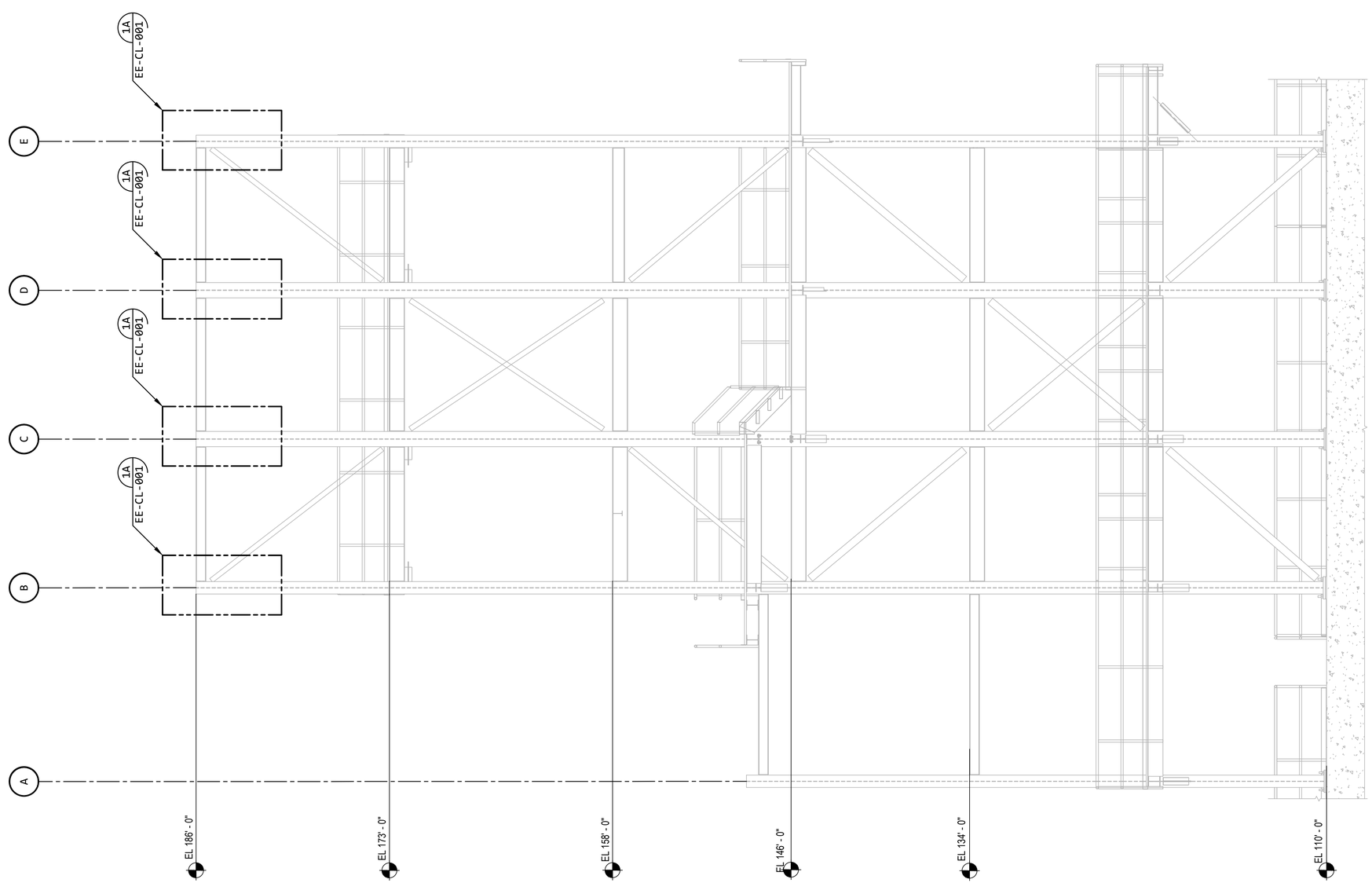

BAR SCALE
1/4" = 1'-0"
CHECK GRAPHIC SCALE BEFORE USING

6' 4' 2' 0 4' 8'

LIGHTNING PROTECTION - ELEVATION AT COLUMN LINE 3

3 --

SCALE: 1/4" = 1'-0"

REVISION					
REV	DATE	DR	CK	AP	DESCRIPTION
0	03/28/2025	SAM	CMM	CMH	ISSUED FOR CONSTRUCTION

"Engineering with Distinction"
ELECTRICAL CONSULTANTS, INC.

THIS DRAWING IS THE PROPERTY OF ELECTRICAL CONSULTANTS, INC. AND IS TO BE USED ONLY FOR THE SPECIFIC PROJECT IDENTIFIED ON THE DRAWING. NO REVISIONS SHALL BE MADE WITHOUT THE EXPRESSED WRITTEN CONSENT OF ELECTRICAL CONSULTANTS, INC.

DRAWN BY: SAM	DATE: 08/22/2024	WOODLAND PULP, LLC WOODLAND FISH LIFT PASSAGE
CHECKED BY: CMM	DATE: 08/22/2024	LIGHTNING PROTECTION ELEVATION AT COLUMN LINE 3
APPROVED BY: CMH	DATE: 08/22/2024	TECHNOLOGY: HYDRO / DRAWING CATEGORY: LAYOUTS
SCALE: NONE	PROJECT NO.: ARL-007	DWG: EE-CL-003 / REV: 0

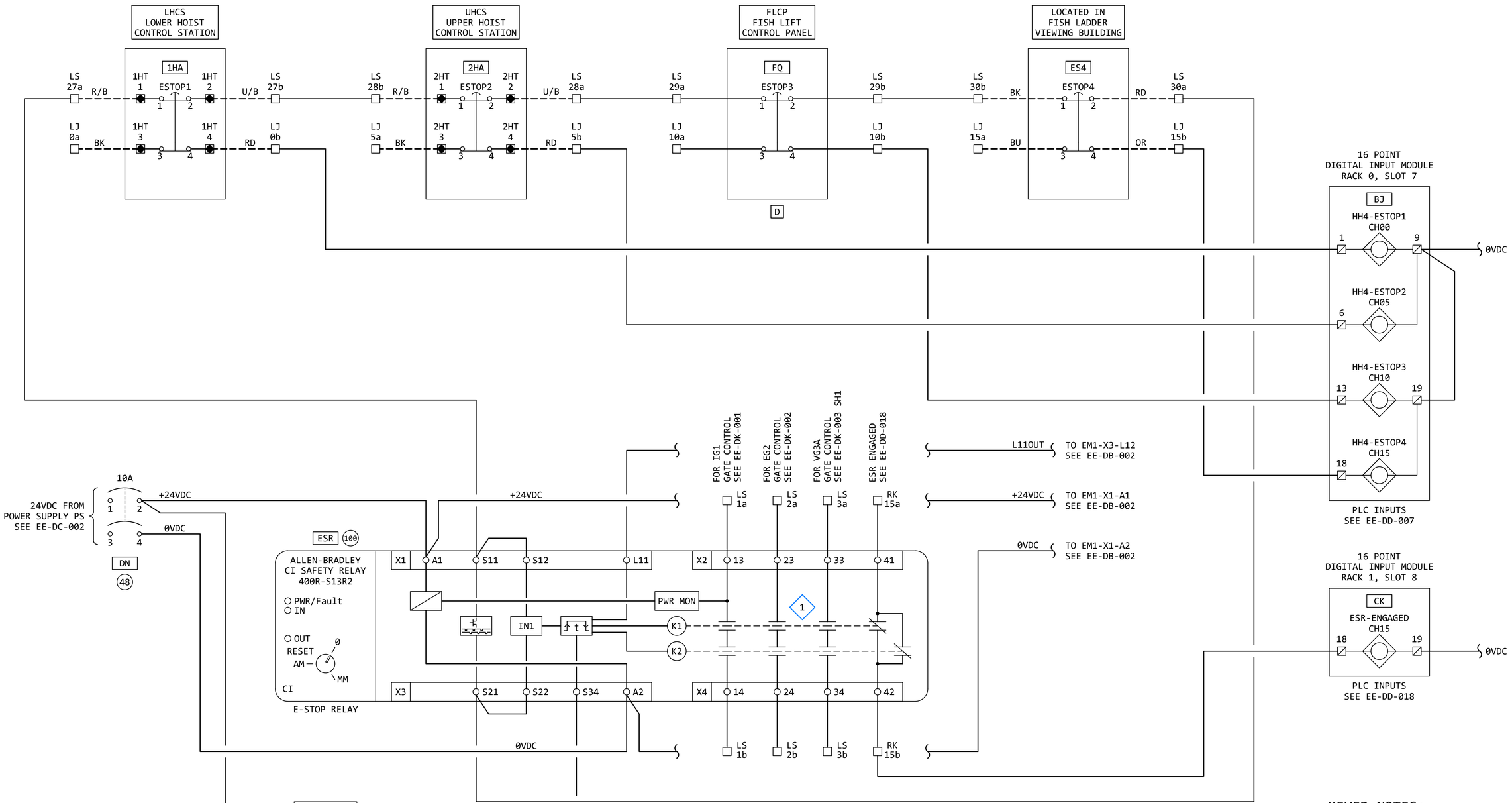

KEYED NOTES:

1. THE K1 AND K2 CONTACTS CHANGE STATE WHEN THE RELAY IS ENGAGED.

REVISION					
REV	DATE	DR	CK	AP	DESCRIPTION
0	03/28/2025	SAM	CMM	CMH	ISSUED FOR CONSTRUCTION

ECI "Engineering with Distinction"
ELECTRICAL CONSULTANTS, INC.

THIS DRAWING IS THE PROPERTY OF ELECTRICAL CONSULTANTS, INC. AND IS TO BE USED ONLY FOR THE SPECIFIC PROJECT IDENTIFIED ON THE DRAWING. NO REVISIONS SHALL BE MADE WITHOUT THE EXPRESSED WRITTEN CONSENT OF ELECTRICAL CONSULTANTS, INC.

DRAWN BY: SAM	DATE: 08/22/2024	WOODLAND PULP, LLC WOODLAND FISH LIFT PASSAGE
CHECKED BY: CMM	DATE: 08/22/2024	SCHEMATIC WIRING DIAGRAM - SHEET 1 FISH LIFT E-STOP CIRCUIT
APPROVED BY: CMH	DATE: 08/22/2024	TECHNOLOGY: HYDRO / DRAWING CATEGORY: SCHEMATICS
SCALE: NONE	PROJECT NO.: ARL-007	DWG: EE-DB-001 / REV: 0

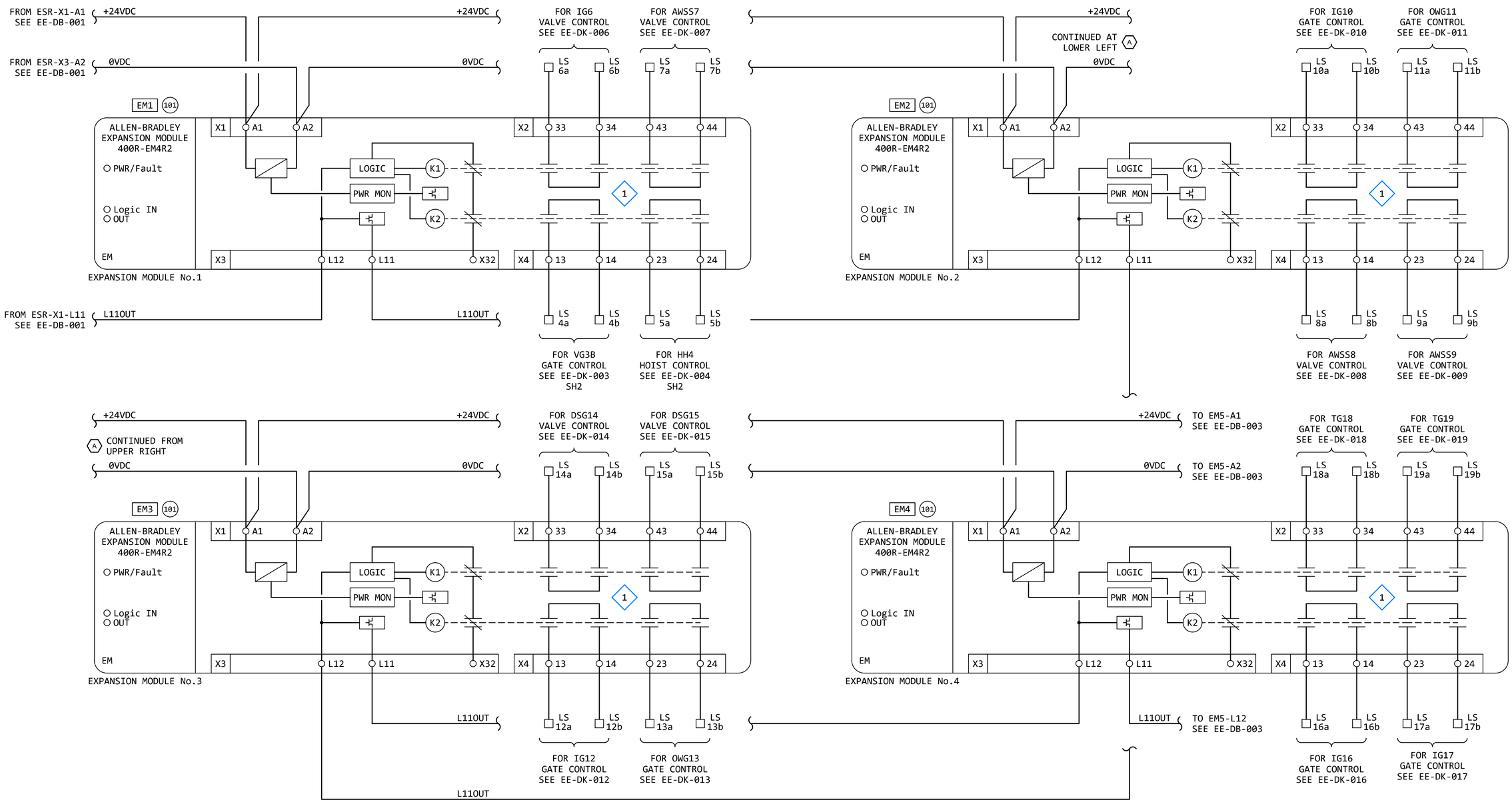

KEYED NOTES:

1. THE K1 AND K2 CONTACTS CHANGE STATE WHEN THE RELAY IS ENGAGED.

REVISION					
REV	DATE	DR	CK	AP	DESCRIPTION
0	03/28/2025	SAM	CMM	CMH	ISSUED FOR CONSTRUCTION

ECI "Engineering with Distinction"
ELECTRICAL CONSULTANTS, INC.

THIS DRAWING IS THE PROPERTY OF ELECTRICAL CONSULTANTS, INC. AND IS TO BE USED ONLY FOR THE SPECIFIC PROJECT IDENTIFIED ON THE DRAWING. NO REVISIONS SHALL BE MADE WITHOUT THE EXPRESSED WRITTEN CONSENT OF ELECTRICAL CONSULTANTS, INC.

DRAWN BY: SAM	DATE: 08/22/2024	WOODLAND PULP, LLC WOODLAND FISH LIFT PASSAGE
CHECKED BY: CMM	DATE: 08/22/2024	SCHEMATIC WIRING DIAGRAM - SHEET 2 FISH LIFT E-STOP CIRCUIT
APPROVED BY: CMH	DATE: 08/22/2024	TECHNOLOGY: HYDRO / DRAWING CATEGORY: SCHEMATICS
SCALE: NONE	PROJECT NO.: ARL-007	DWG: EE-DB-002 / REV: 0

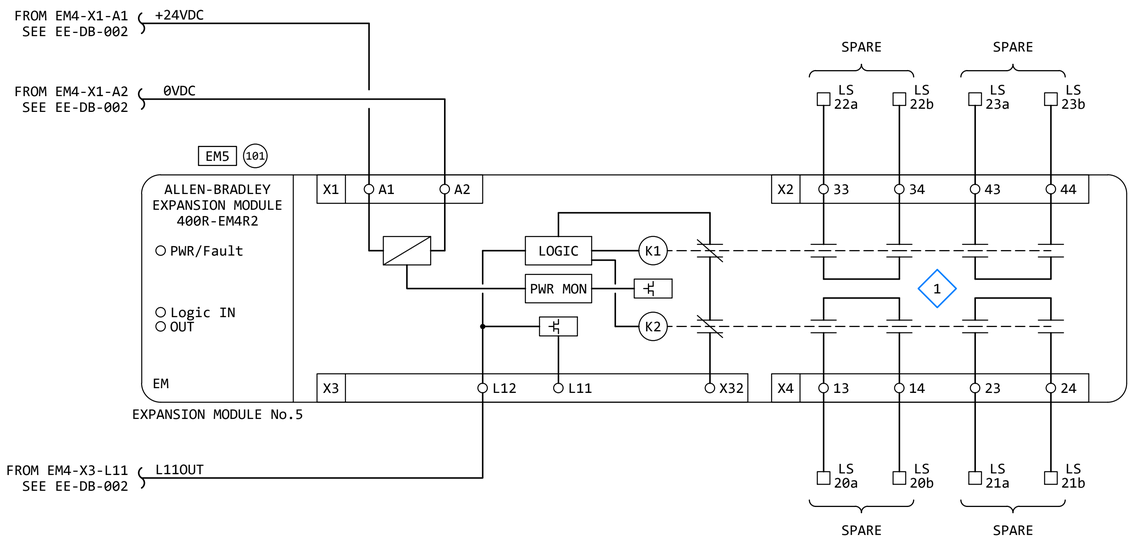

KEYED NOTES:

1. THE K1 AND K2 CONTACTS CHANGE STATE WHEN THE RELAY IS ENGAGED.

REVISION					
REV	DATE	DR	CK	AP	DESCRIPTION
0	03/28/2025	SAM	CMM	CMH	ISSUED FOR CONSTRUCTION

ECI "Engineering with Distinction"
ELECTRICAL CONSULTANTS, INC.

THIS DRAWING IS THE PROPERTY OF ELECTRICAL CONSULTANTS, INC. AND IS TO BE USED ONLY FOR THE SPECIFIC PROJECT IDENTIFIED ON THE DRAWING. NO REVISIONS SHALL BE MADE WITHOUT THE EXPRESSED WRITTEN CONSENT OF ELECTRICAL CONSULTANTS, INC.

DRAWN BY: SAM	DATE: 08/22/2024	WOODLAND PULP, LLC WOODLAND FISH LIFT PASSAGE
CHECKED BY: CMM	DATE: 08/22/2024	SCHEMATIC WIRING DIAGRAM - SHEET 3 FISH LIFT E-STOP CIRCUIT
APPROVED BY: CMH	DATE: 08/22/2024	TECHNOLOGY: HYDRO / DRAWING CATEGORY: SCHEMATICS
SCALE: NONE	PROJECT NO.: ARL-007	DWG: EE-DB-003 / REV: 0

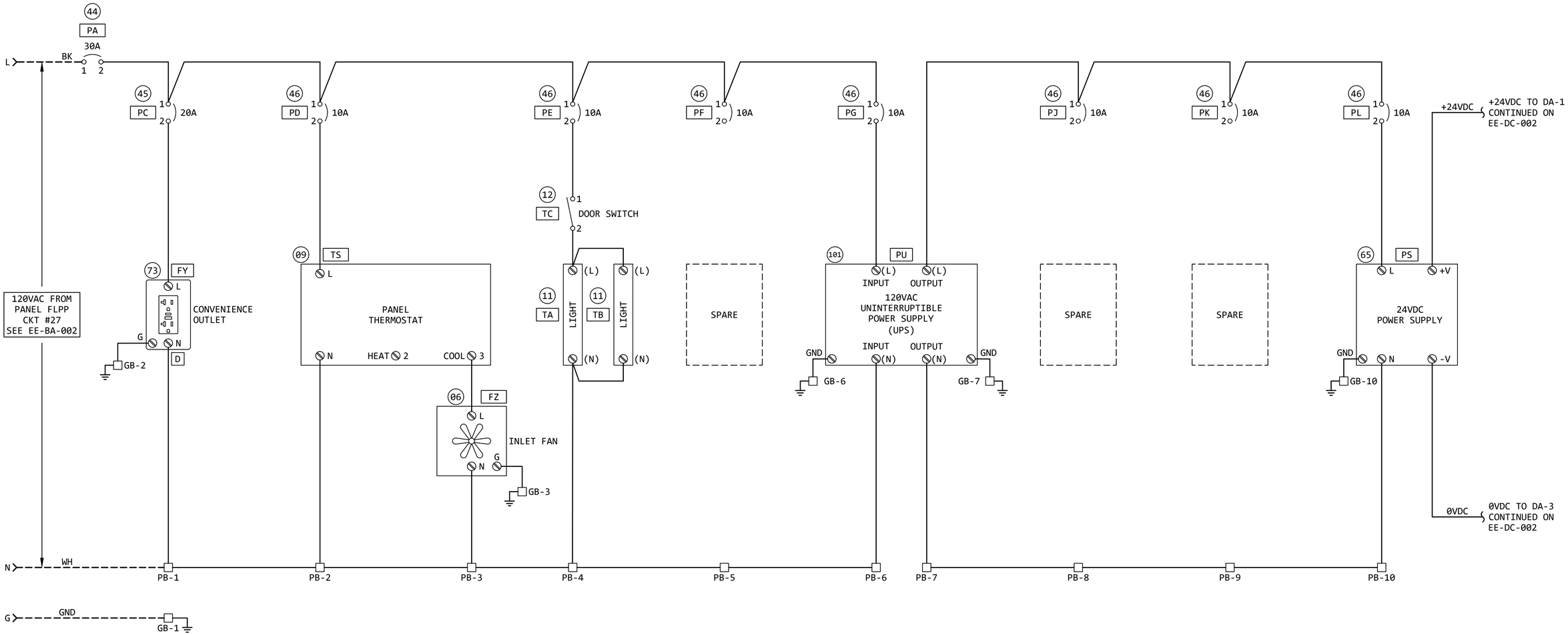

120VAC CONTROL POWER DISTRIBUTION - FISH LIFT CONTROL PANEL (FLCP)

REVISION					
REV	DATE	DR	CK	AP	DESCRIPTION
0	03/28/2025	SAM	CMM	CMH	ISSUED FOR CONSTRUCTION

"Engineering with Distinction"
ELECTRICAL CONSULTANTS, INC.

THIS DRAWING IS THE PROPERTY OF ELECTRICAL CONSULTANTS, INC. AND IS TO BE USED ONLY FOR THE SPECIFIC PROJECT IDENTIFIED ON THE DRAWING. NO REVISIONS SHALL BE MADE WITHOUT THE EXPRESSED WRITTEN CONSENT OF ELECTRICAL CONSULTANTS, INC.

DRAWN BY: SAM	DATE: 02/22/2024	WOODLAND PULP, LLC WOODLAND FISH LIFT PASSAGE	
CHECKED BY: CMM	DATE: 02/22/2024	120VAC CONTROL POWER DISTRIBUTION FISH LIFT CONTROL PANEL (FLCP)	
APPROVED BY: CMH	DATE: 02/22/2024	TECHNOLOGY: HYDRO	DRAWING CATEGORY: SCHEMATICS
SCALE: NONE	PROJECT NO.: ARL-007	DWG: EE-DC-001	REV: 0

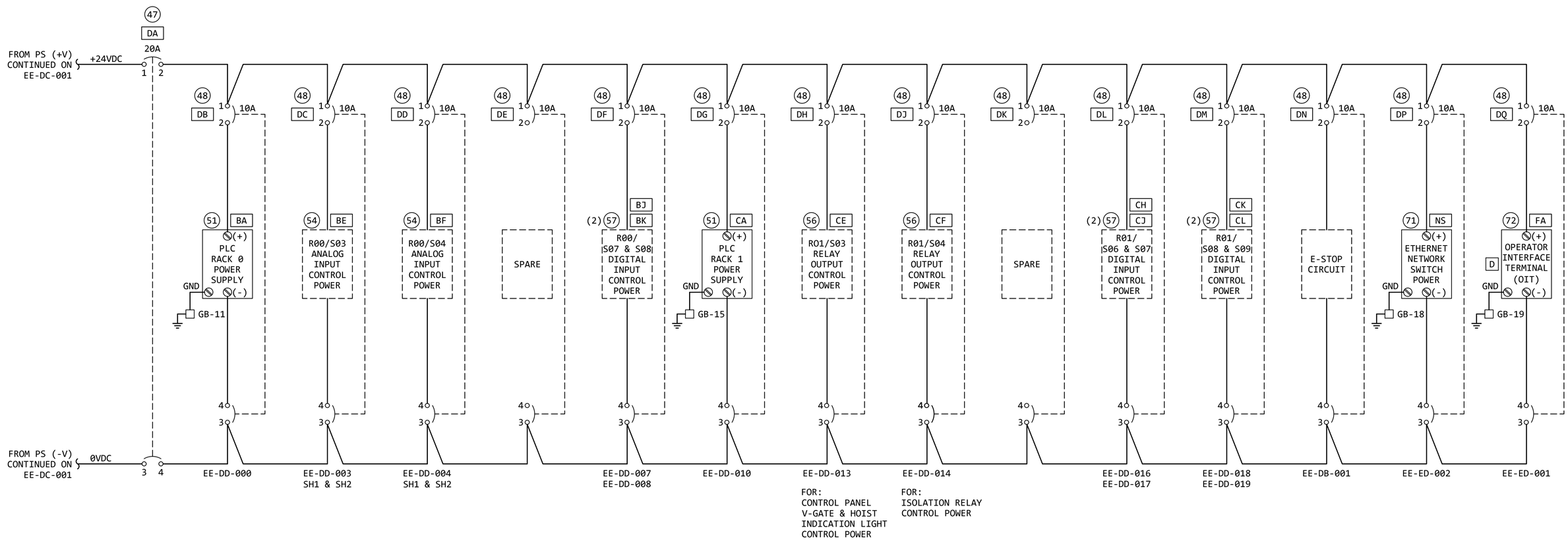

24VDC POWER DISTRIBUTION - FISH LIFT CONTROL PANEL (FLCP)

REVISION

REV	DATE	DR	CK	AP	DESCRIPTION
0	03/28/2025	SAM	CMM	CMH	ISSUED FOR CONSTRUCTION

ECI "Engineering with Distinction"
ELECTRICAL CONSULTANTS, INC.

THIS DRAWING IS THE PROPERTY OF ELECTRICAL CONSULTANTS, INC. AND IS TO BE USED ONLY FOR THE SPECIFIC PROJECT IDENTIFIED ON THE DRAWING. NO REVISIONS SHALL BE MADE WITHOUT THE EXPRESSED WRITTEN CONSENT OF ELECTRICAL CONSULTANTS, INC.

DRAWN BY: SAM	DATE: 02/22/2024	WOODLAND PULP, LLC WOODLAND FISH LIFT PASSAGE	
CHECKED BY: CMM	DATE: 02/22/2024	24VDC CONTROL POWER DISTRIBUTION FISH LIFT CONTROL PANEL (FLCP)	
APPROVED BY: CMH	DATE: 02/22/2024	TECHNOLOGY: HYDRO	DRAWING CATEGORY: SCHEMATICS
SCALE: NONE		PROJECT NO.: ARL-007	DWG: EE-DC-002 / REV: 0

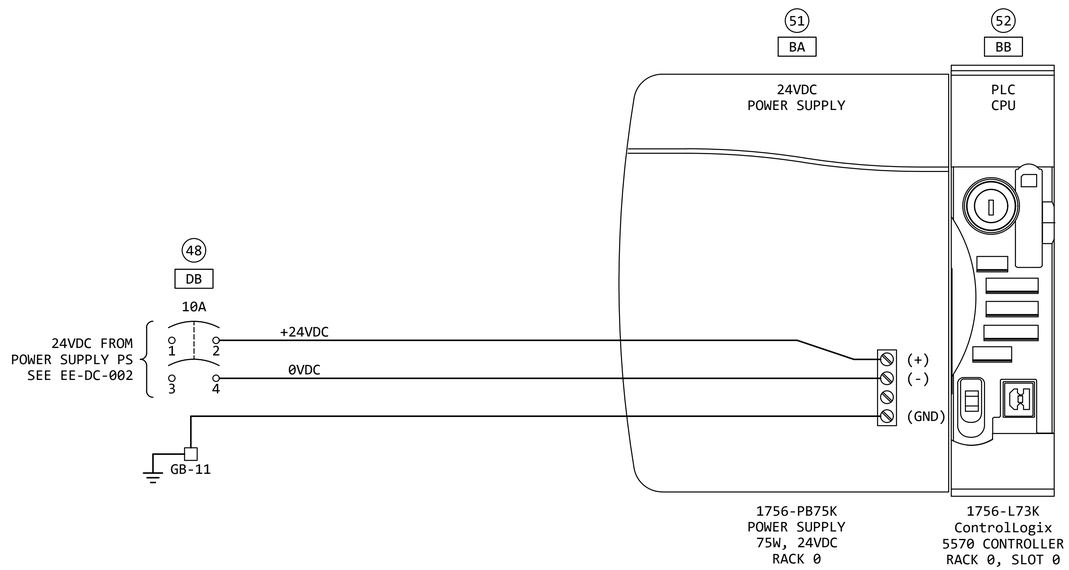

REVISION					
REV	DATE	DR	CK	AP	DESCRIPTION
0	03/28/2025	SAM	CMM	CMH	ISSUED FOR CONSTRUCTION

"Engineering with Distinction"
ELECTRICAL CONSULTANTS, INC.

THIS DRAWING IS THE PROPERTY OF ELECTRICAL CONSULTANTS, INC. AND IS TO BE USED ONLY FOR THE SPECIFIC PROJECT IDENTIFIED ON THE DRAWING. NO REVISIONS SHALL BE MADE WITHOUT THE EXPRESSED WRITTEN CONSENT OF ELECTRICAL CONSULTANTS, INC.

DRAWN BY: SAM	DATE: 02/22/2024	WOODLAND PULP, LLC WOODLAND FISH LIFT PASSAGE
CHECKED BY: CMM	DATE: 02/22/2024	FLCP PLC RACK 0, SLOT 0 POWER SUPPLY AND CPU
APPROVED BY: CMH	DATE: 02/22/2024	TECHNOLOGY: HYDRO DRAWING CATEGORY: SCHEMATICS
SCALE: NONE	PROJECT NO.: ARL-007	DWG: EE-DD-000 REV: 0

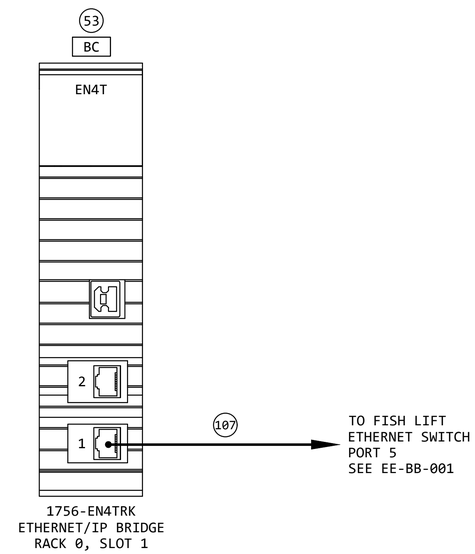

REVISION					
REV	DATE	DR	CK	AP	DESCRIPTION
0	03/28/2025	SAM	CMM	CMH	ISSUED FOR CONSTRUCTION

"Engineering with Distinction"
ELECTRICAL CONSULTANTS, INC.

THIS DRAWING IS THE PROPERTY OF ELECTRICAL CONSULTANTS, INC. AND IS TO BE USED ONLY FOR THE SPECIFIC PROJECT IDENTIFIED ON THE DRAWING. NO REVISIONS SHALL BE MADE WITHOUT THE EXPRESSED WRITTEN CONSENT OF ELECTRICAL CONSULTANTS, INC.

DRAWN BY: SAM	DATE: 02/22/2024	WOODLAND PULP, LLC WOODLAND FISH LIFT PASSAGE
CHECKED BY: CMM	DATE: 02/22/2024	FLCP PLC RACK 0, SLOT 1 ETHERNET/IP BRIDGE
APPROVED BY: CMH	DATE: 02/22/2024	TECHNOLOGY: HYDRO DRAWING CATEGORY: SCHEMATICS
SCALE: NONE	PROJECT NO.: ARL-007	DWG: EE-DD-001 REV: 0

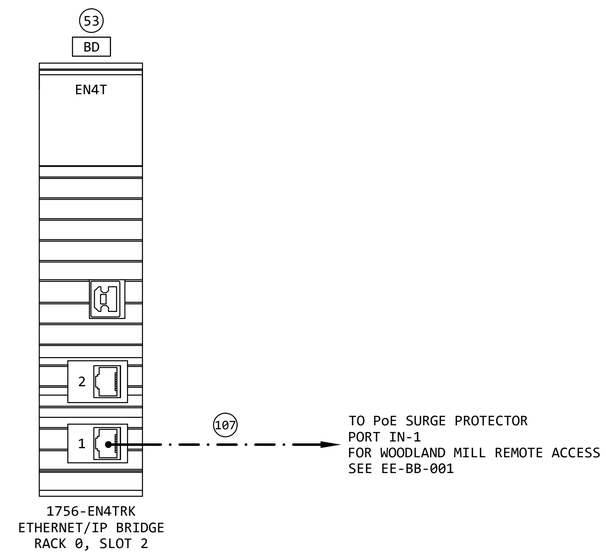

REVISION					
REV	DATE	DR	CK	AP	DESCRIPTION
0	03/28/2025	SAM	CMM	CMH	ISSUED FOR CONSTRUCTION

ECI "Engineering with Distinction"
ELECTRICAL CONSULTANTS, INC.

THIS DRAWING IS THE PROPERTY OF ELECTRICAL CONSULTANTS, INC. AND IS TO BE USED ONLY FOR THE SPECIFIC PROJECT IDENTIFIED ON THE DRAWING. NO REVISIONS SHALL BE MADE WITHOUT THE EXPRESSED WRITTEN CONSENT OF ELECTRICAL CONSULTANTS, INC.

DRAWN BY: SAM	DATE: 02/22/2024	WOODLAND PULP, LLC WOODLAND FISH LIFT PASSAGE
CHECKED BY: CMM	DATE: 02/22/2024	FLCP PLC RACK 0, SLOT 2 ETHERNET/IP BRIDGE
APPROVED BY: CMH	DATE: 02/22/2024	TECHNOLOGY: HYDRO DRAWING CATEGORY: SCHEMATICS
SCALE: NONE	PROJECT NO.: ARL-007	DWG: EE-DD-002 REV: 0

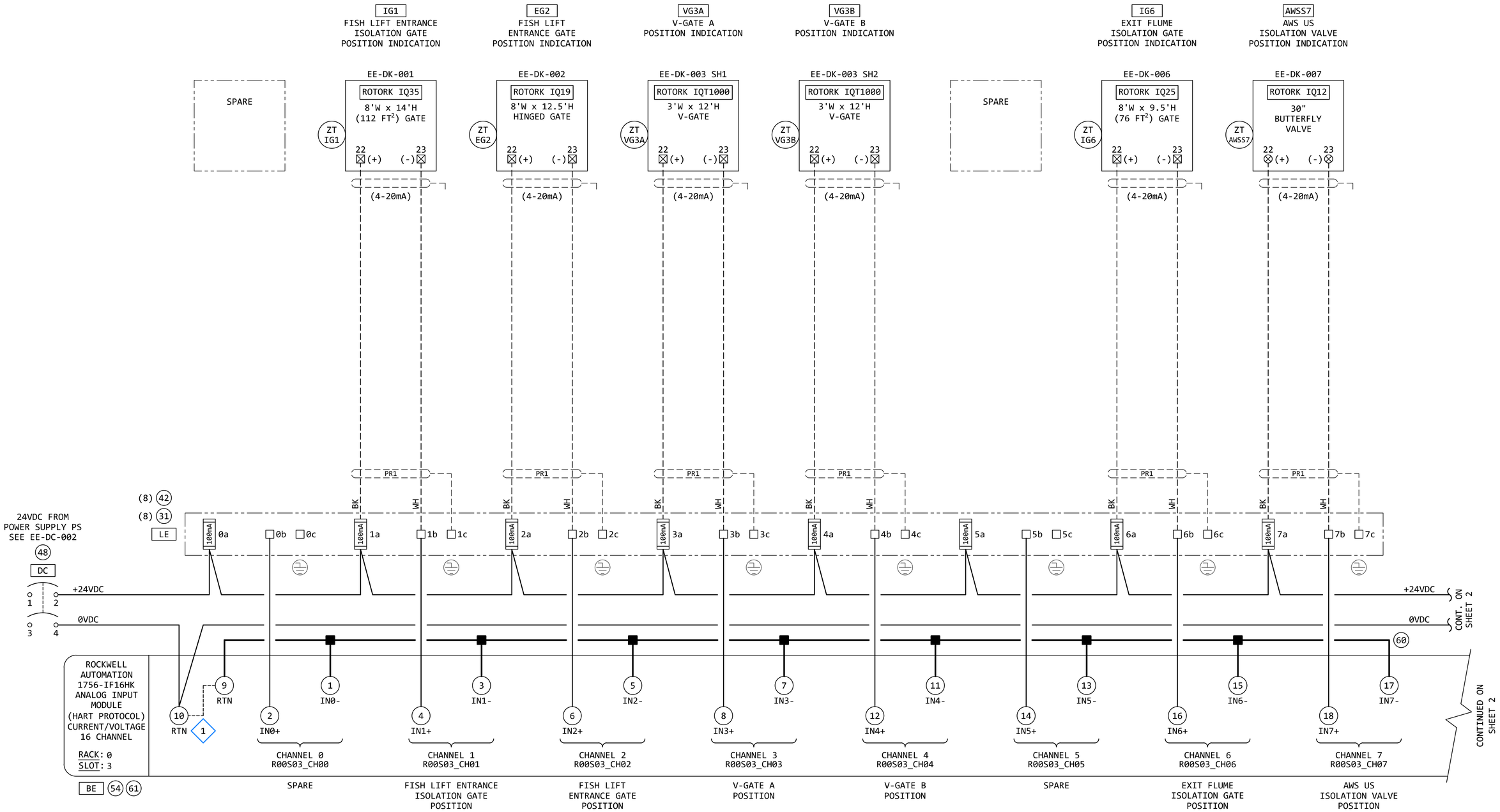

KEYED NOTES:

1. ALL TERMINALS MARKED "RTN" (9&10) ARE CONNECTED INTERNALLY.

REVISION

REV	DATE	DR	CK	AP	DESCRIPTION
0	03/28/2025	SAM	CMM	CMH	ISSUED FOR CONSTRUCTION

"Engineering with Distinction"
ELECTRICAL CONSULTANTS, INC.

THIS DRAWING IS THE PROPERTY OF ELECTRICAL CONSULTANTS, INC. AND IS TO BE USED ONLY FOR THE SPECIFIC PROJECT IDENTIFIED ON THE DRAWING. NO REVISIONS SHALL BE MADE WITHOUT THE EXPRESSED WRITTEN CONSENT OF ELECTRICAL CONSULTANTS, INC.

DRAWN BY: SAM	DATE: 02/22/2024	WOODLAND PULP, LLC WOODLAND FISH LIFT PASSAGE	
CHECKED BY: CMM	DATE: 02/22/2024	FLCP PLC RACK 0, SLOT 3 ANALOG INPUT MODULE	
APPROVED BY: CMH	DATE: 02/22/2024	TECHNOLOGY: HYDRO	DRAWING CATEGORY: SCHEMATICS
SCALE: NONE	PROJECT NO.: ARL-007	DWG: EE-DD-003 SH1	REV: 0

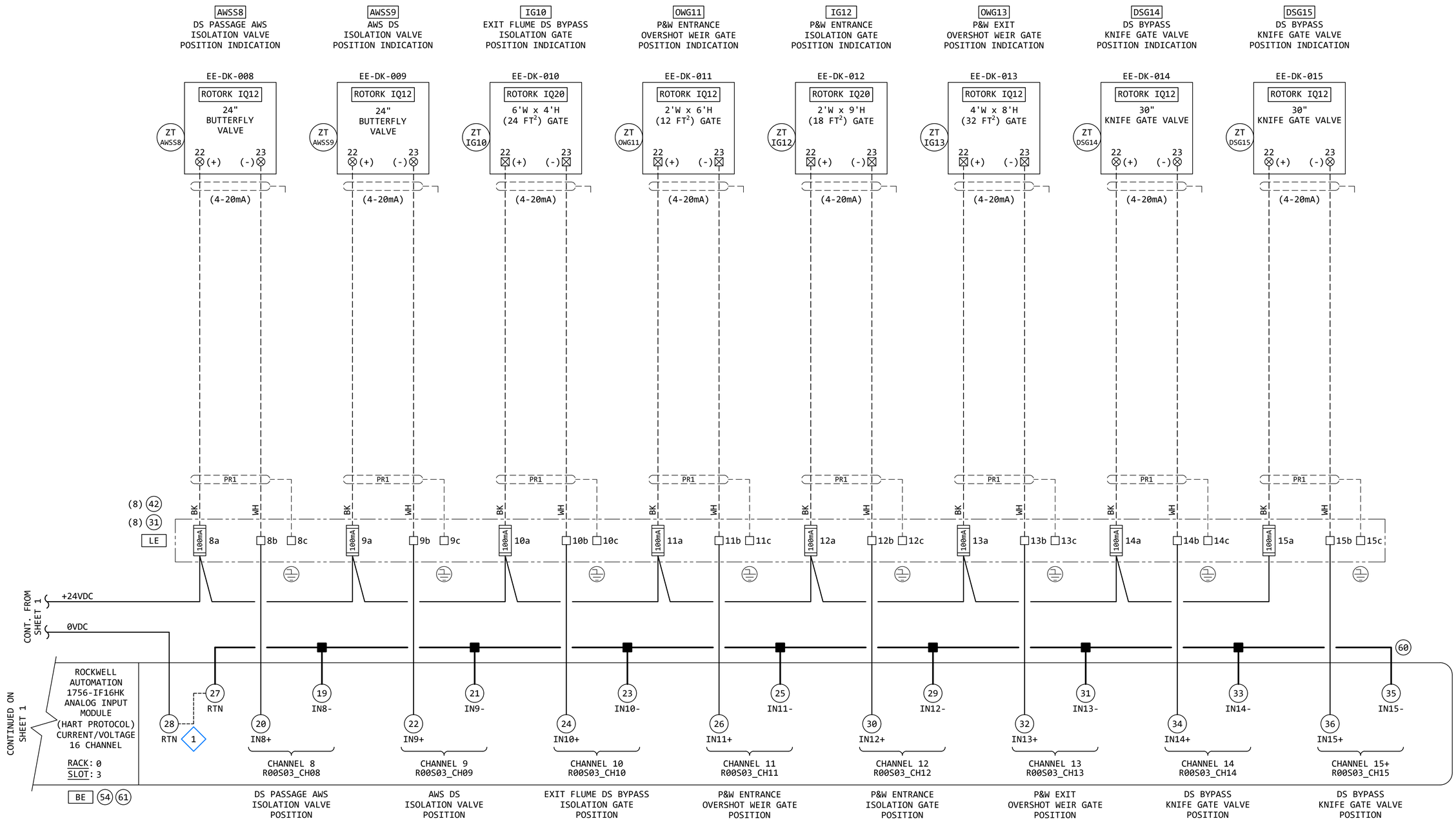

KEYED NOTES:

1. ALL TERMINALS MARKED "RTN" (27&28) ARE CONNECTED INTERNALLY.

REVISION

REV	DATE	DR	CK	AP	DESCRIPTION
0	03/28/2025	SAM	CMM	CMH	ISSUED FOR CONSTRUCTION

ELECTRICAL CONSULTANTS, INC.

THIS DRAWING IS THE PROPERTY OF ELECTRICAL CONSULTANTS, INC. AND IS TO BE USED ONLY FOR THE SPECIFIC PROJECT IDENTIFIED ON THE DRAWING. NO REVISIONS SHALL BE MADE WITHOUT THE EXPRESSED WRITTEN CONSENT OF ELECTRICAL CONSULTANTS, INC.

DRAWN BY: SAM	DATE: 02/22/2024	WOODLAND PULP, LLC WOODLAND FISH LIFT PASSAGE
CHECKED BY: CMM	DATE: 02/22/2024	FLCP PLC RACK 0, SLOT 3 ANALOG INPUT MODULE (CONT)
APPROVED BY: CMH	DATE: 02/22/2024	TECHNOLOGY: HYDRO / DRAWING CATEGORY: SCHEMATICS
SCALE: NONE	PROJECT NO.: ARL-007	DWG: EE-DD-003 SH2 / REV: 0

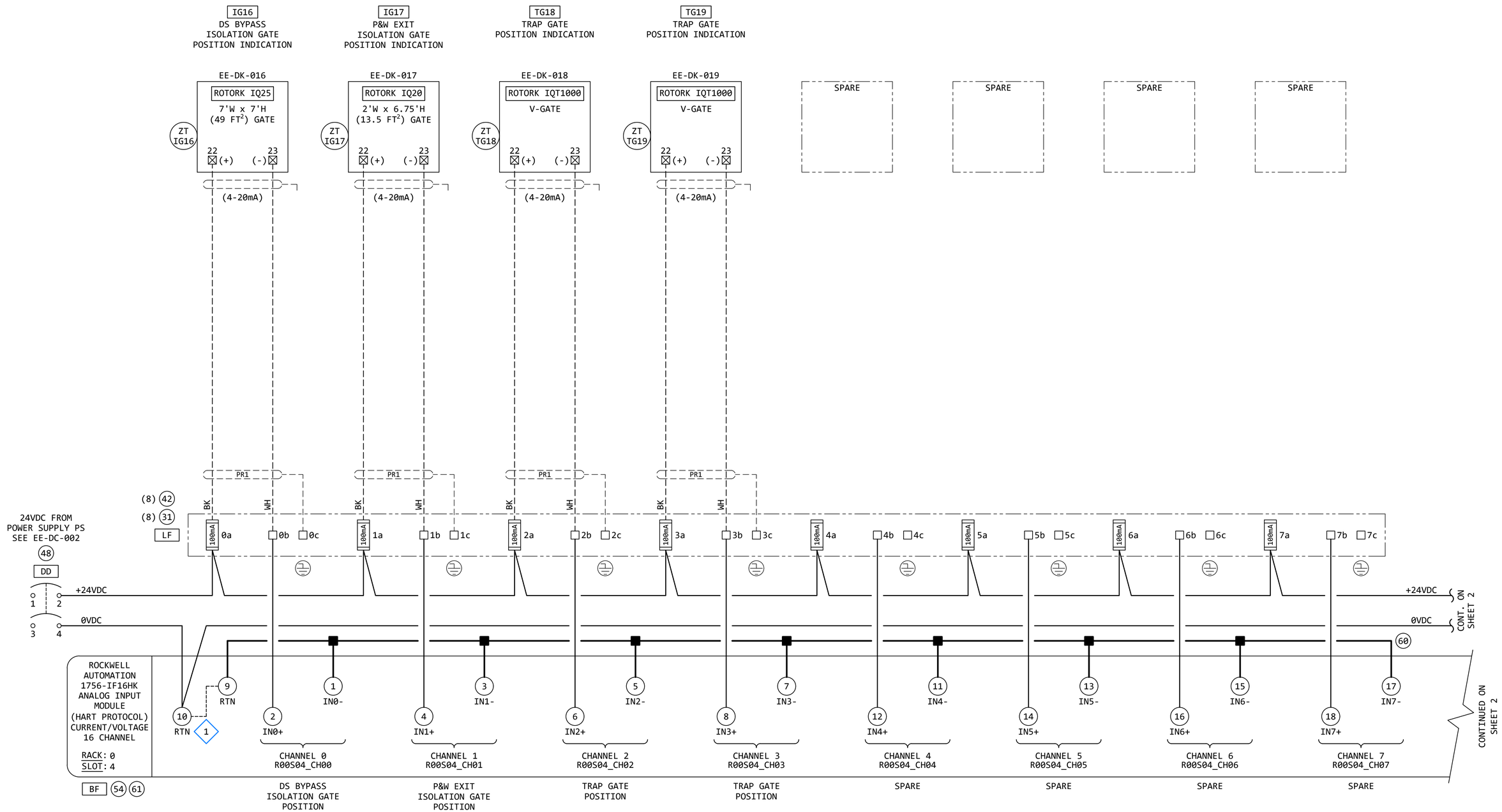

KEYED NOTES:

1. ALL TERMINALS MARKED "RTN" (9&10) ARE CONNECTED INTERNALLY.

REVISION

REV	DATE	DR	CK	AP	DESCRIPTION
0	03/28/2025	SAM	CMM	CMH	ISSUED FOR CONSTRUCTION

EGI "Engineering with Distinction"
ELECTRICAL CONSULTANTS, INC.

THIS DRAWING IS THE PROPERTY OF ELECTRICAL CONSULTANTS, INC. AND IS TO BE USED ONLY FOR THE SPECIFIC PROJECT IDENTIFIED ON THE DRAWING. NO REVISIONS SHALL BE MADE WITHOUT THE EXPRESSED WRITTEN CONSENT OF ELECTRICAL CONSULTANTS, INC.

DRAWN BY: SAM	DATE: 02/22/2024	WOODLAND PULP, LLC WOODLAND FISH LIFT PASSAGE	
CHECKED BY: CMM	DATE: 02/22/2024	FLCP PLC RACK 0, SLOT 4 ANALOG INPUT MODULE	
APPROVED BY: CMH	DATE: 02/22/2024	TECHNOLOGY: HYDRO	DRAWING CATEGORY: SCHEMATICS
SCALE: NONE	PROJECT NO.: ARL-007	DWG: EE-DD-004 SH1	REV: 0

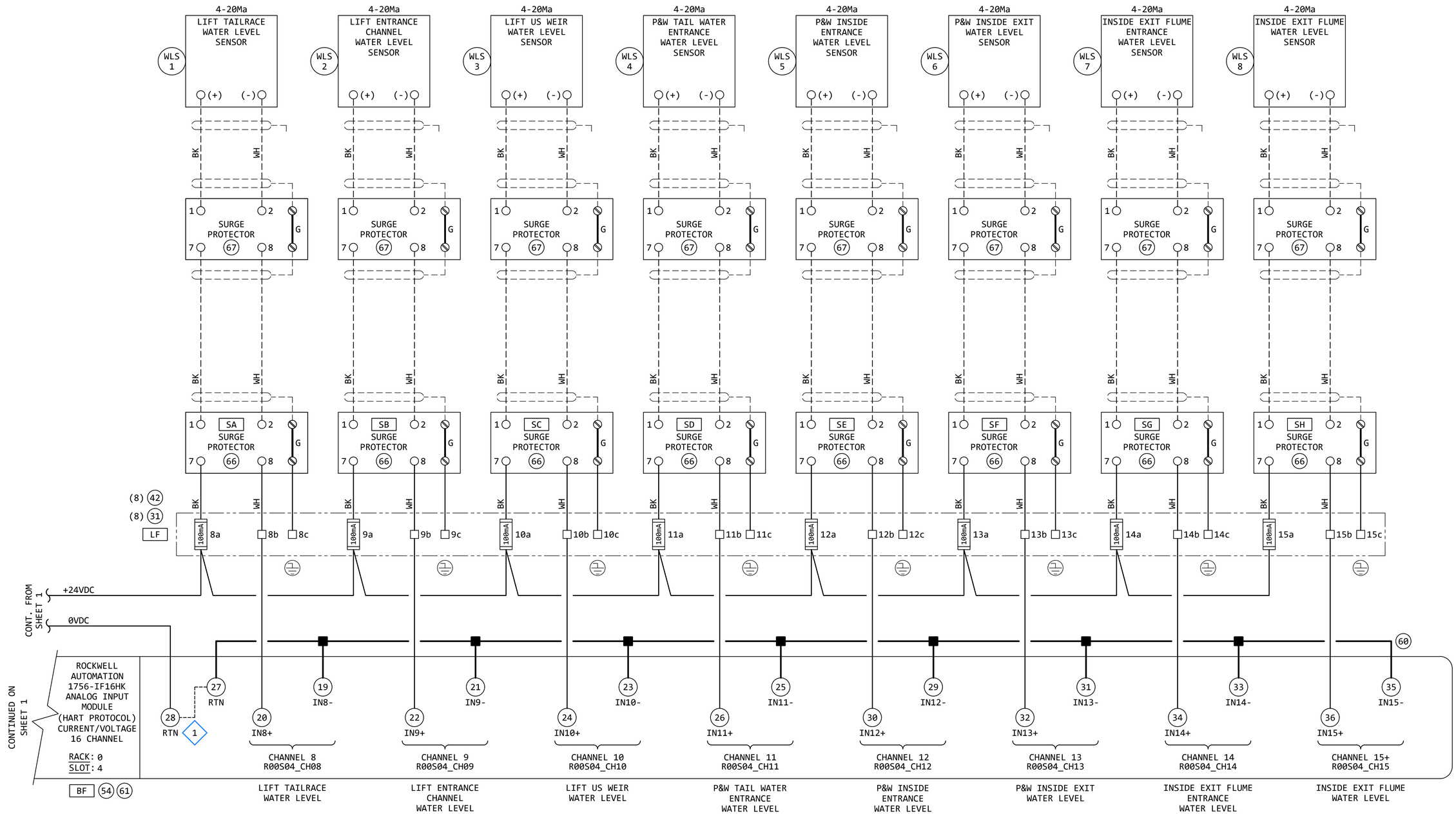

KEYED NOTES:

1. ALL TERMINALS MARKED "RTN" (27&28) ARE CONNECTED INTERNALLY.

REVISION

REV	DATE	DR	CK	AP	DESCRIPTION
0	03/28/2025	SAM	CMM	CMH	ISSUED FOR CONSTRUCTION

ECI "Engineering with Distinction"
ELECTRICAL CONSULTANTS, INC.

THIS DRAWING IS THE PROPERTY OF ELECTRICAL CONSULTANTS, INC. AND IS TO BE USED ONLY FOR THE SPECIFIC PROJECT IDENTIFIED ON THE DRAWING. NO REVISIONS SHALL BE MADE WITHOUT THE EXPRESSED WRITTEN CONSENT OF ELECTRICAL CONSULTANTS, INC.

DRAWN BY: SAM	DATE: 02/22/2024	WOODLAND PULP, LLC WOODLAND FISH LIFT PASSAGE	
CHECKED BY: CMM	DATE: 02/22/2024	FLCP PLC RACK 0, SLOT 4 ANALOG INPUT MODULE (CONT)	
APPROVED BY: CMH	DATE: 02/22/2024	TECHNOLOGY: HYDRO	DRAWING CATEGORY: SCHEMATICS
SCALE: NONE	PROJECT NO.: ARL-007	DWG: EE-DD-004 SH2	REV: 0

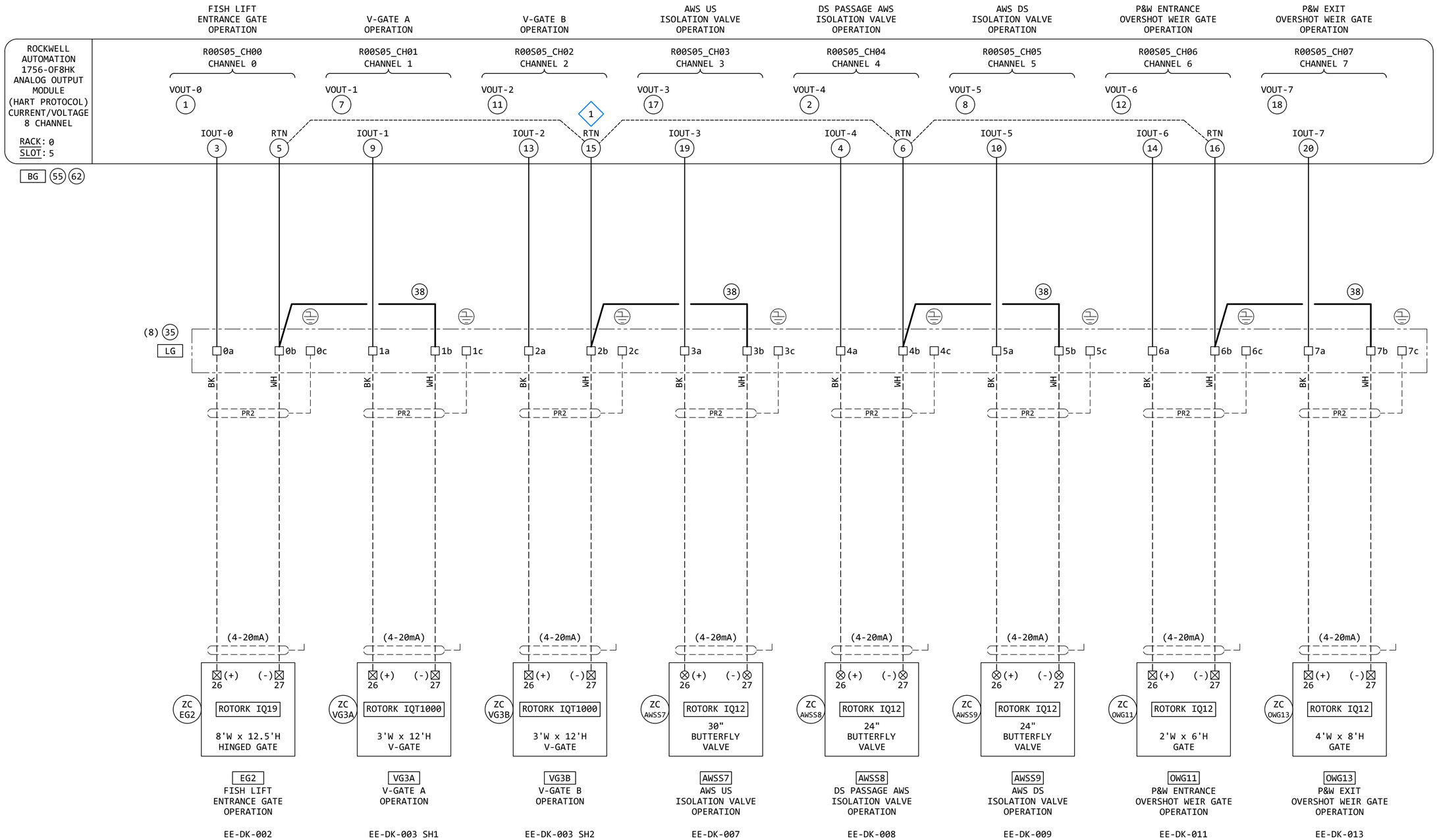

KEYED NOTES:

1. ALL TERMINALS MARKED "RTN" (5, 6, 15 & 16) ARE CONNECTED INTERNALLY.

REVISION

REV	DATE	DR	CK	AP	DESCRIPTION
0	03/28/2025	SAM	CMM	CMH	ISSUED FOR CONSTRUCTION

ECI "Engineering with Distinction"
ELECTRICAL CONSULTANTS, INC.

THIS DRAWING IS THE PROPERTY OF ELECTRICAL CONSULTANTS, INC. AND IS TO BE USED ONLY FOR THE SPECIFIC PROJECT IDENTIFIED ON THE DRAWING. NO REVISIONS SHALL BE MADE WITHOUT THE EXPRESSED WRITTEN CONSENT OF ELECTRICAL CONSULTANTS, INC.

DRAWN BY: SAM	DATE: 02/22/2024	WOODLAND PULP, LLC WOODLAND FISH LIFT PASSAGE	
CHECKED BY: CMM	DATE: 02/22/2024	FLCP PLC RACK 0, SLOT 5 ANALOG OUTPUT MODULE	
APPROVED BY: CMH	DATE: 02/22/2024	TECHNOLOGY: HYDRO	DRAWING CATEGORY: SCHEMATICS
SCALE: NONE	PROJECT NO.: ARL-007	DWG: EE-DD-005	REV: 0

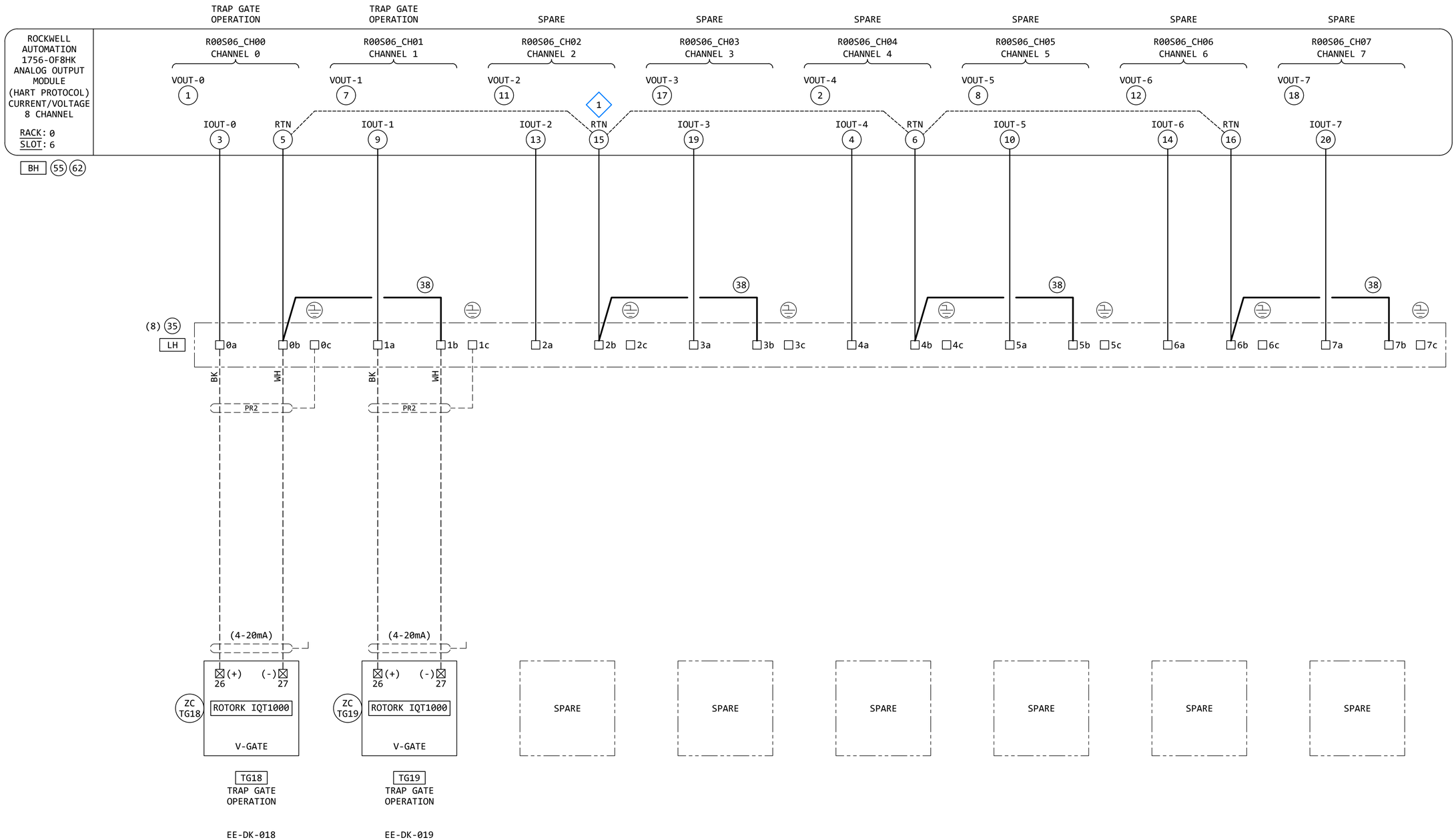

KEYED NOTES:

1. ALL TERMINALS MARKED "RTN" (5, 6, 15 & 16) ARE CONNECTED INTERNALLY.

REVISION					
REV	DATE	DR	CK	AP	DESCRIPTION
0	03/28/2025	SAM	CMM	CMH	ISSUED FOR CONSTRUCTION

ECI "Engineering with Distinction"
ELECTRICAL CONSULTANTS, INC.

THIS DRAWING IS THE PROPERTY OF ELECTRICAL CONSULTANTS, INC. AND IS TO BE USED ONLY FOR THE SPECIFIC PROJECT IDENTIFIED ON THE DRAWING. NO REVISIONS SHALL BE MADE WITHOUT THE EXPRESSED WRITTEN CONSENT OF ELECTRICAL CONSULTANTS, INC.

DRAWN BY: SAM	DATE: 02/22/2024	WOODLAND PULP, LLC WOODLAND FISH LIFT PASSAGE
CHECKED BY: CMM	DATE: 02/22/2024	FLCP PLC RACK 0, SLOT 6 ANALOG OUTPUT MODULE
APPROVED BY: CMH	DATE: 02/22/2024	TECHNOLOGY: HYDRO / DRAWING CATEGORY: SCHEMATICS
SCALE: NONE	PROJECT NO.: ARL-007	DWG: EE-DD-006 / REV: 0

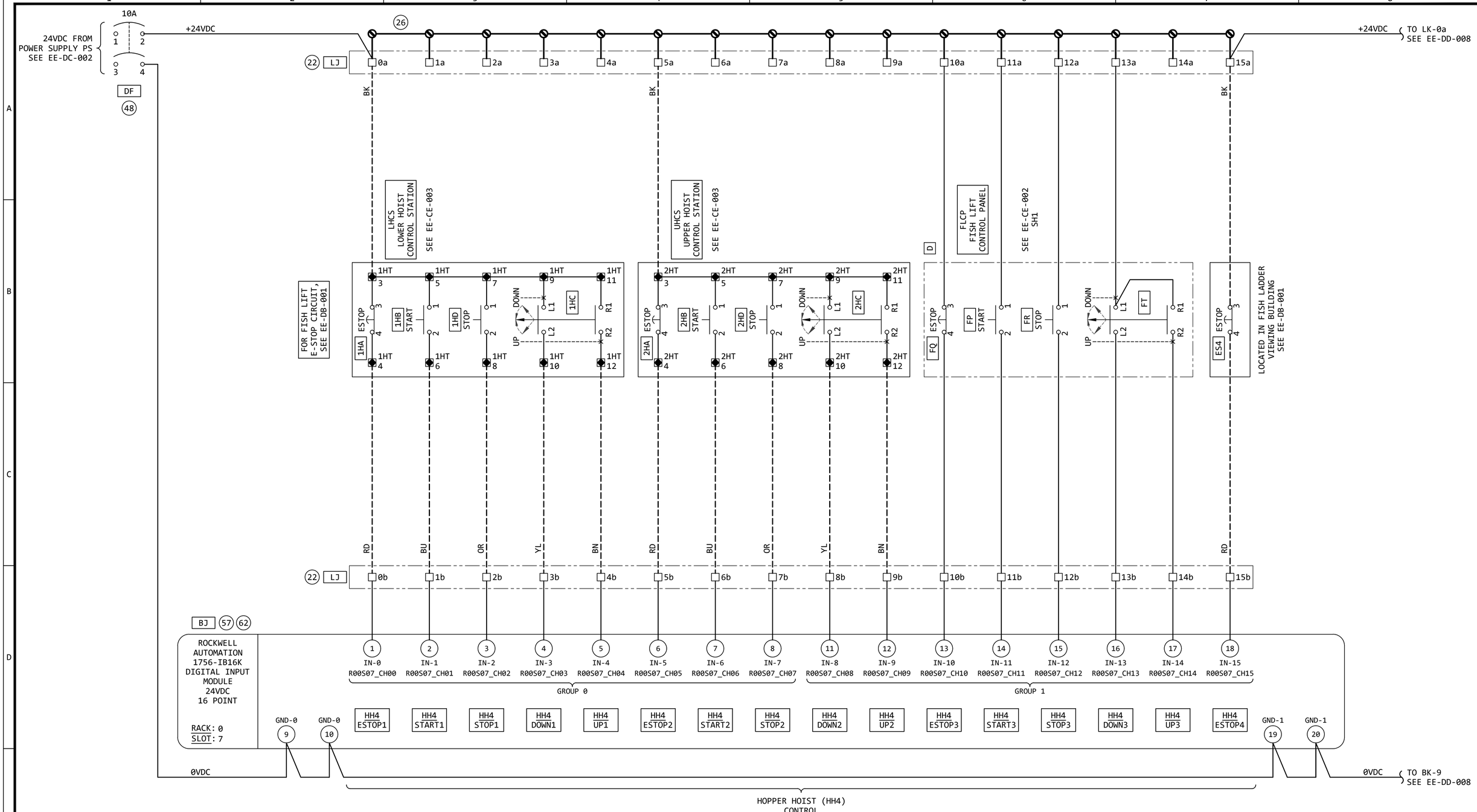

REVISION

REV	DATE	DR	CK	AP	DESCRIPTION
0	03/28/2025	SAM	CMM	CMH	ISSUED FOR CONSTRUCTION

ECI "Engineering with Distinction"
ELECTRICAL CONSULTANTS, INC.

THIS DRAWING IS THE PROPERTY OF ELECTRICAL CONSULTANTS, INC. AND IS TO BE USED ONLY FOR THE SPECIFIC PROJECT IDENTIFIED ON THE DRAWING. NO REVISIONS SHALL BE MADE WITHOUT THE EXPRESSED WRITTEN CONSENT OF ELECTRICAL CONSULTANTS, INC.

DRAWN BY: SAM	DATE: 02/22/2024	WOODLAND PULP, LLC WOODLAND FISH LIFT PASSAGE
CHECKED BY: CMM	DATE: 02/22/2024	FLCP PLC RACK 0, SLOT 7 DIGITAL INPUT MODULE
APPROVED BY: CMH	DATE: 02/22/2024	TECHNOLOGY: HYDRO / DRAWING CATEGORY: SCHEMATICS
SCALE: NONE	PROJECT NO.: ARL-007	DWG: EE-DD-007 / REV: 0

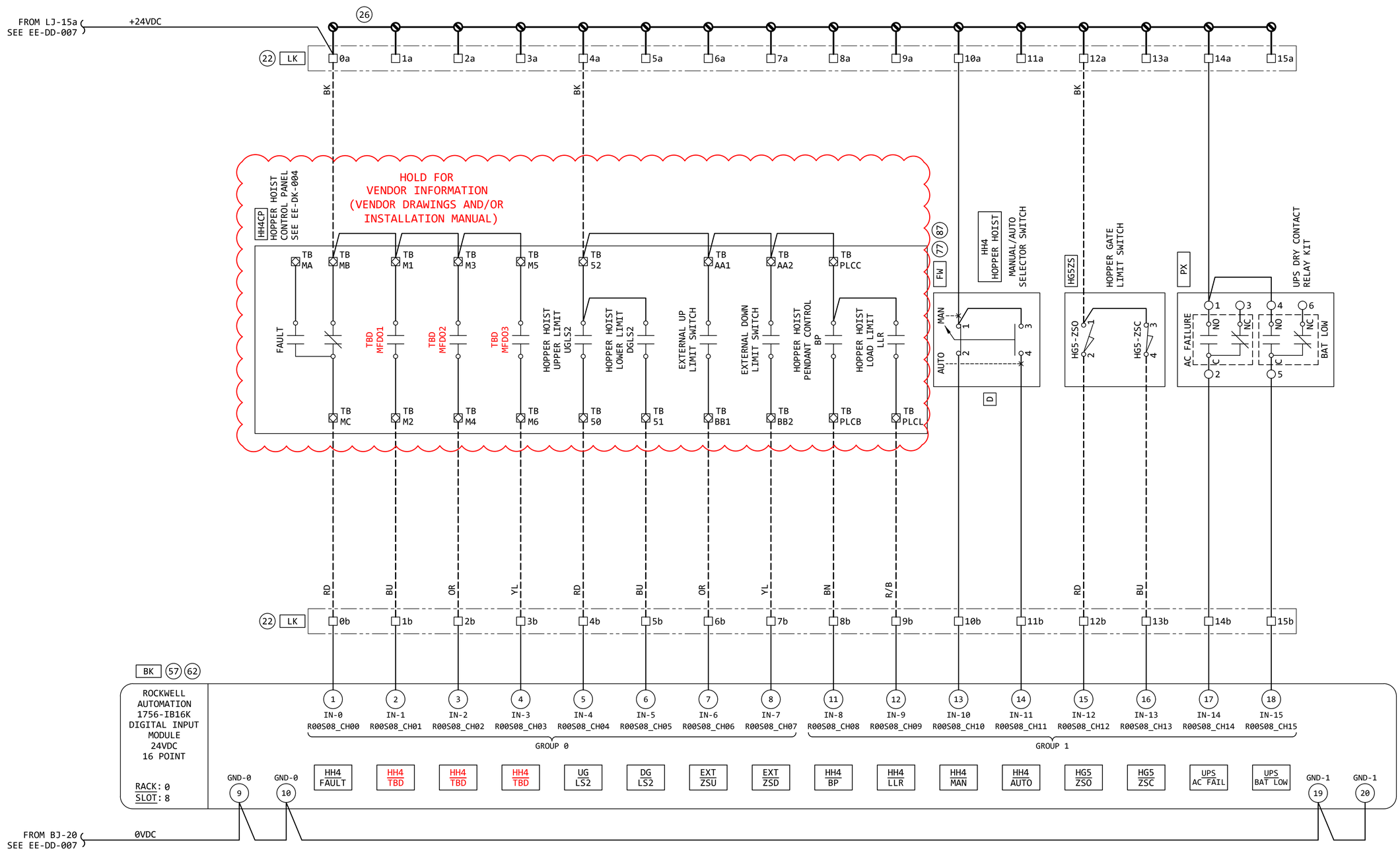

REVISION

REV	DATE	DR	CK	AP	DESCRIPTION
0	03/28/2025	SAM	CMM	CMH	ISSUED FOR CONSTRUCTION

ECI "Engineering with Distinction"
ELECTRICAL CONSULTANTS, INC.

THIS DRAWING IS THE PROPERTY OF ELECTRICAL CONSULTANTS, INC. AND IS TO BE USED ONLY FOR THE SPECIFIC PROJECT IDENTIFIED ON THE DRAWING. NO REVISIONS SHALL BE MADE WITHOUT THE EXPRESSED WRITTEN CONSENT OF ELECTRICAL CONSULTANTS, INC.

DRAWN BY: SAM	DATE: 02/22/2024	WOODLAND PULP, LLC WOODLAND FISH LIFT PASSAGE
CHECKED BY: CMM	DATE: 02/22/2024	FLCP PLC RACK 0, SLOT 8 DIGITAL INPUT MODULE
APPROVED BY: CMH	DATE: 02/22/2024	TECHNOLOGY: HYDRO / DRAWING CATEGORY: SCHEMATICS
SCALE: NONE	PROJECT NO.: ARL-007	DWG: EE-DD-008 / REV: 0

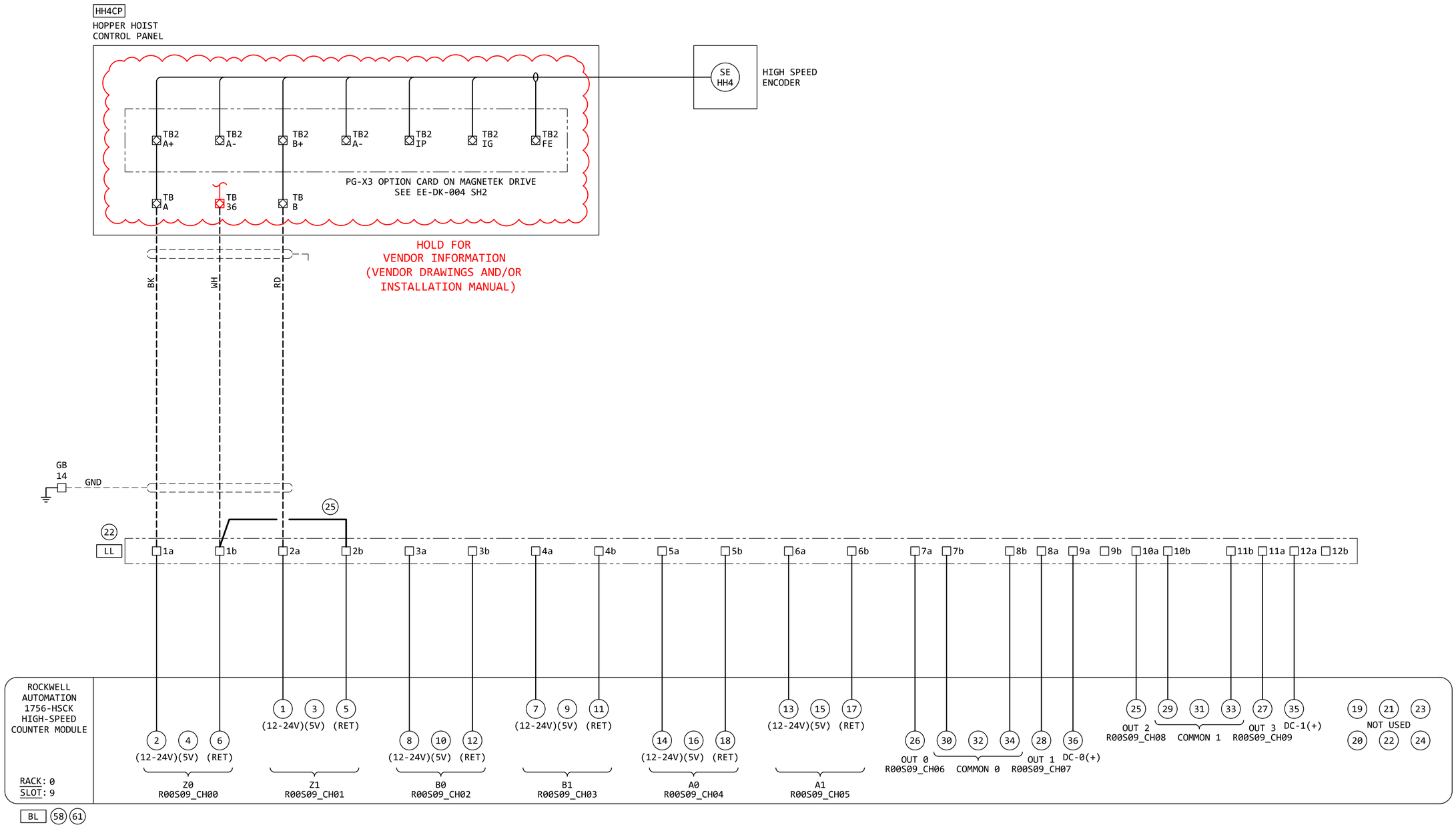

REVISION					
REV	DATE	DR	CK	AP	DESCRIPTION
0	03/28/2025	SAM	CMM	CMH	ISSUED FOR CONSTRUCTION

"Engineering with Distinction"
ELECTRICAL CONSULTANTS, INC.

THIS DRAWING IS THE PROPERTY OF ELECTRICAL CONSULTANTS, INC. AND IS TO BE USED ONLY FOR THE SPECIFIC PROJECT IDENTIFIED ON THE DRAWING. NO REVISIONS SHALL BE MADE WITHOUT THE EXPRESSED WRITTEN CONSENT OF ELECTRICAL CONSULTANTS, INC.

DRAWN BY: SAM	DATE: 02/22/2024	WOODLAND PULP, LLC WOODLAND FISH LIFT PASSAGE	
CHECKED BY: CMM	DATE: 02/22/2024	FLCP PLC RACK 0, SLOT 9 HIGH SPEED COUNTER MODULE	
APPROVED BY: CMH	DATE: 02/22/2024	TECHNOLOGY: HYDRO	DRAWING CATEGORY: SCHEMATICS
SCALE: NONE	PROJECT NO.: ARL-007	DWG: EE-DD-009	REV: 0

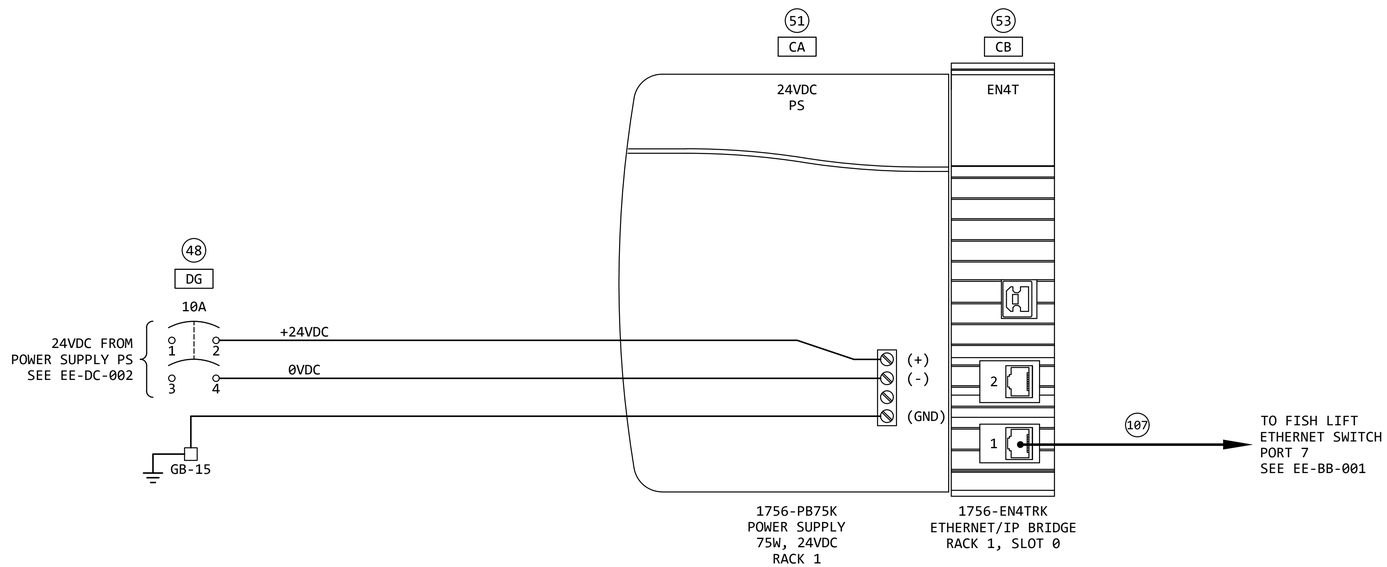

REVISION					
REV	DATE	DR	CK	AP	DESCRIPTION
0	03/28/2025	SAM	CMM	CMH	ISSUED FOR CONSTRUCTION

"Engineering with Distinction"
ELECTRICAL CONSULTANTS, INC.

THIS DRAWING IS THE PROPERTY OF ELECTRICAL CONSULTANTS, INC. AND IS TO BE USED ONLY FOR THE SPECIFIC PROJECT IDENTIFIED ON THE DRAWING. NO REVISIONS SHALL BE MADE WITHOUT THE EXPRESSED WRITTEN CONSENT OF ELECTRICAL CONSULTANTS, INC.

DRAWN BY: SAM	DATE: 02/22/2024	WOODLAND PULP, LLC WOODLAND FISH LIFT PASSAGE
CHECKED BY: CMM	DATE: 02/22/2024	FLCP PLC RACK 1, SLOT 0 POWER SUPPLY AND ETHERNET/IP BRIDGE
APPROVED BY: CMH	DATE: 02/22/2024	TECHNOLOGY: HYDRO / DRAWING CATEGORY: SCHEMATICS
SCALE: NONE	PROJECT NO.: ARL-007	DWG: EE-DD-010 / REV: 0

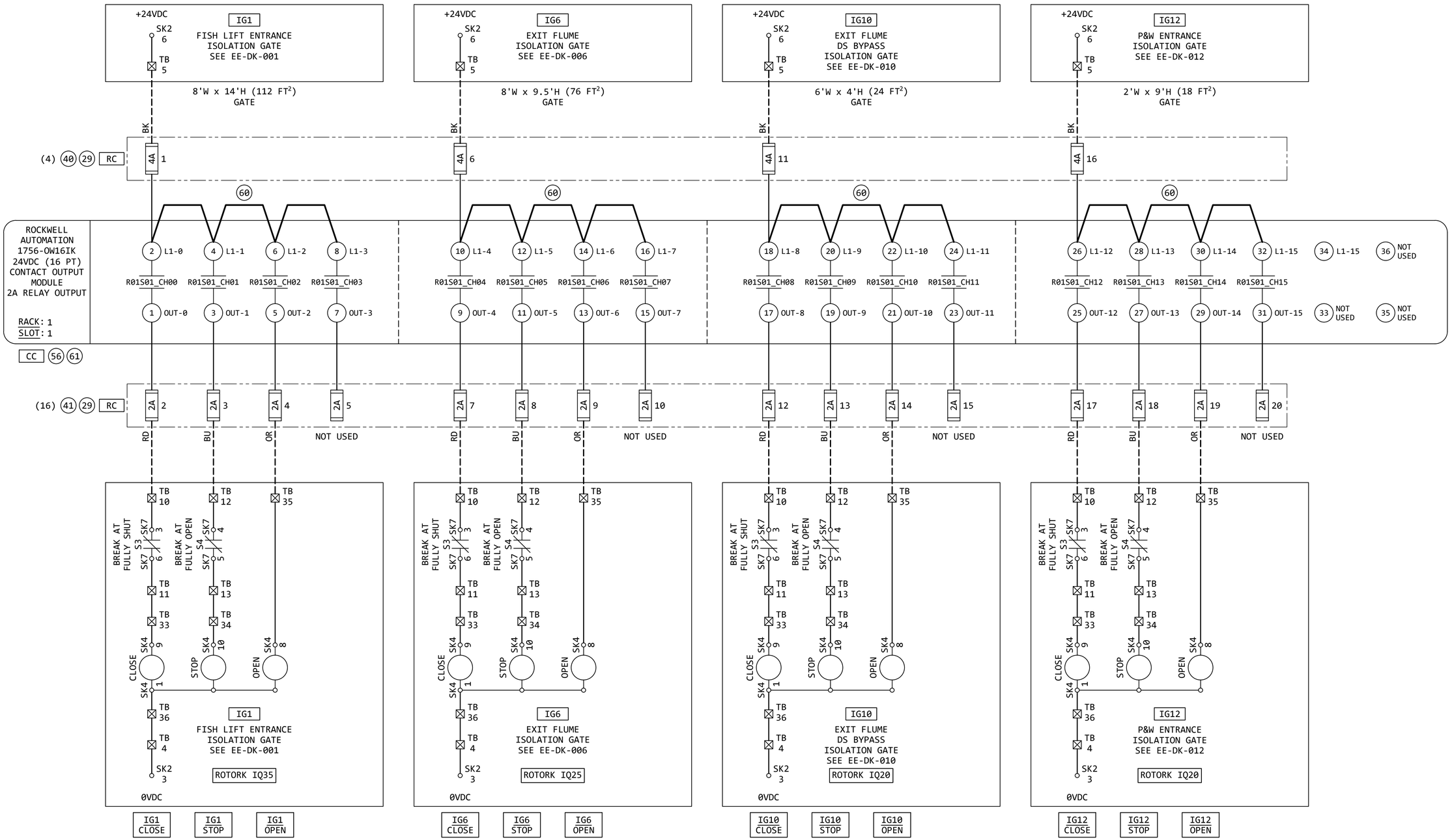

REVISION

REV	DATE	DR	CK	AP	DESCRIPTION
0	03/28/2025	SAM	CMM	CMH	ISSUED FOR CONSTRUCTION

ECI "Engineering with Distinction"
ELECTRICAL CONSULTANTS, INC.

THIS DRAWING IS THE PROPERTY OF ELECTRICAL CONSULTANTS, INC. AND IS TO BE USED ONLY FOR THE SPECIFIC PROJECT IDENTIFIED ON THE DRAWING. NO REVISIONS SHALL BE MADE WITHOUT THE EXPRESSED WRITTEN CONSENT OF ELECTRICAL CONSULTANTS, INC.

DRAWN BY: SAM	DATE: 02/22/2024	WOODLAND PULP, LLC WOODLAND FISH LIFT PASSAGE
CHECKED BY: CMM	DATE: 02/22/2024	FLCP PLC RACK 1, SLOT 1 RELAY OUTPUT MODULE
APPROVED BY: CMH	DATE: 02/22/2024	TECHNOLOGY: HYDRO / DRAWING CATEGORY: SCHEMATICS
SCALE: NONE	PROJECT NO.: ARL-007	DWG: EE-DD-011 / REV: 0

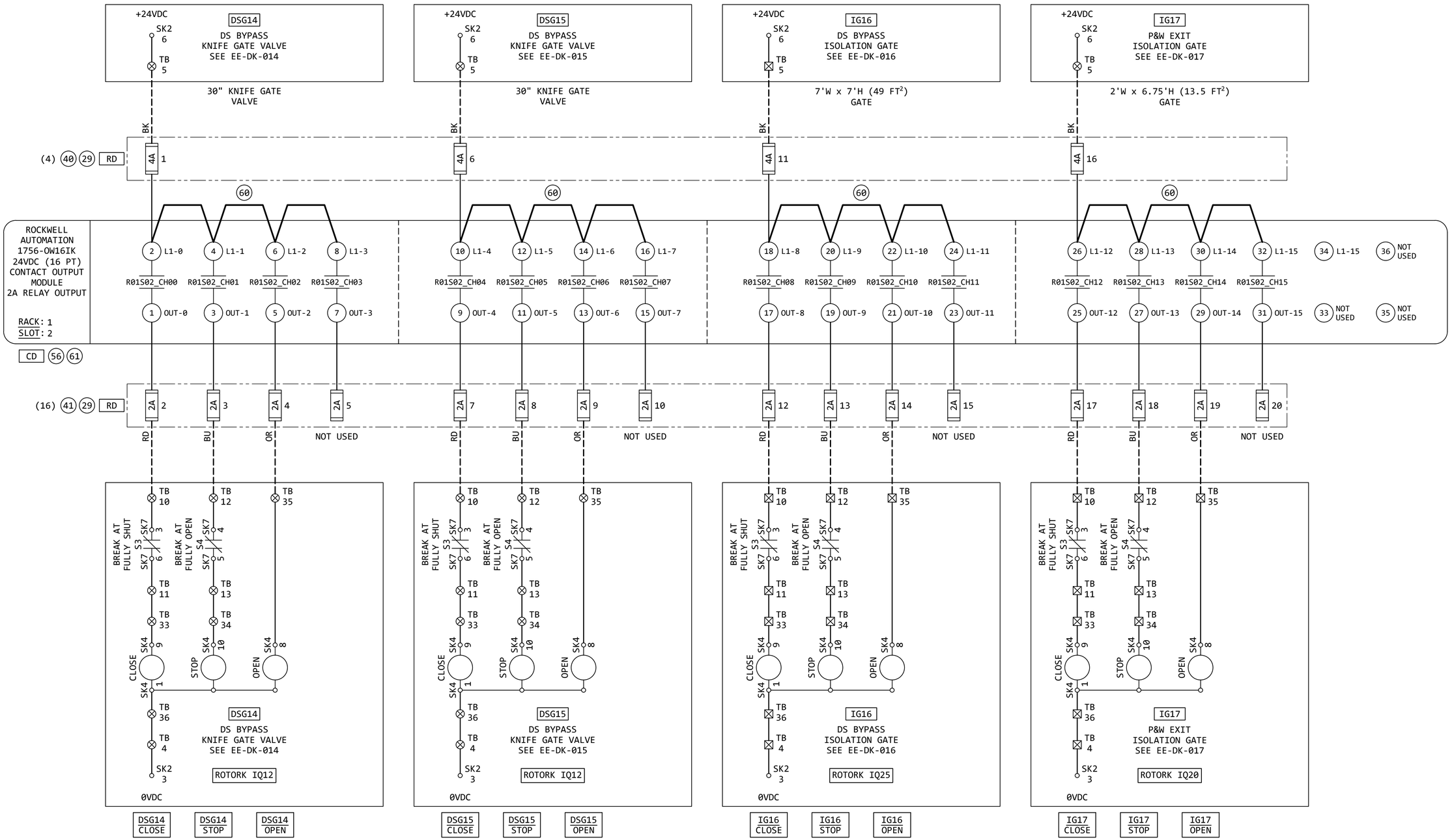

REVISION

REV	DATE	DR	CK	AP	DESCRIPTION
0	03/28/2025	SAM	CMM	CMH	ISSUED FOR CONSTRUCTION

ECI "Engineering with Distinction"
ELECTRICAL CONSULTANTS, INC.

THIS DRAWING IS THE PROPERTY OF ELECTRICAL CONSULTANTS, INC. AND IS TO BE USED ONLY FOR THE SPECIFIC PROJECT IDENTIFIED ON THE DRAWING. NO REVISIONS SHALL BE MADE WITHOUT THE EXPRESSED WRITTEN CONSENT OF ELECTRICAL CONSULTANTS, INC.

DRAWN BY: SAM	DATE: 02/22/2024	WOODLAND PULP, LLC WOODLAND FISH LIFT PASSAGE
CHECKED BY: CMM	DATE: 02/22/2024	FLCP PLC RACK 1, SLOT 2 RELAY OUTPUT MODULE
APPROVED BY: CMH	DATE: 02/22/2024	TECHNOLOGY: HYDRO / DRAWING CATEGORY: SCHEMATICS
SCALE: NONE	PROJECT NO.: ARL-007	DWG: EE-DD-012 / REV: 0

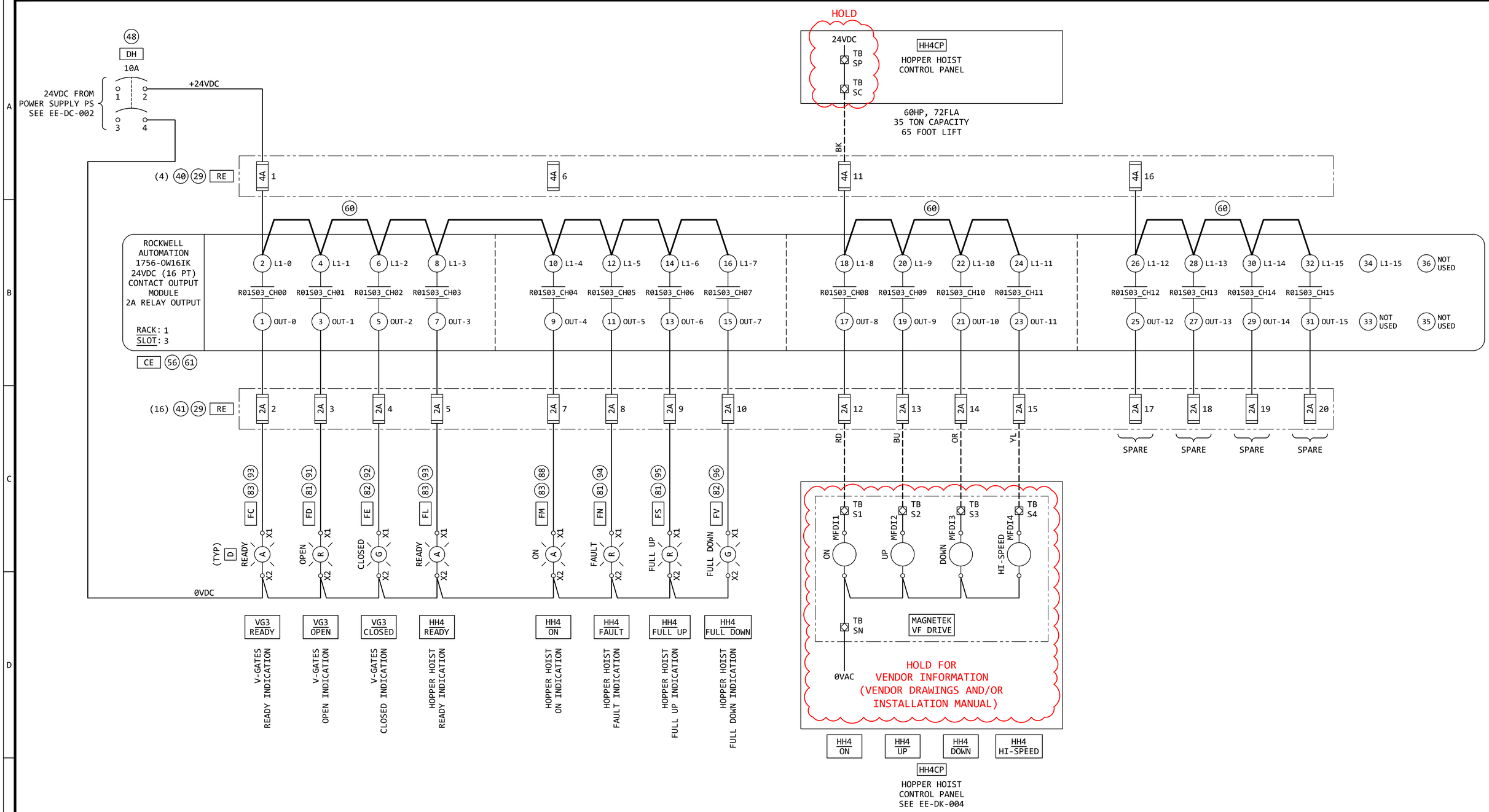

REVISION

REV	DATE	DR	CK	AP	DESCRIPTION
0	03/28/2025	SAM	CMM	CMH	ISSUED FOR CONSTRUCTION

"Engineering with Distinction"
ELECTRICAL CONSULTANTS, INC.

THIS DRAWING IS THE PROPERTY OF ELECTRICAL CONSULTANTS, INC. AND IS TO BE USED ONLY FOR THE SPECIFIC PROJECT IDENTIFIED ON THE DRAWING. NO REVISIONS SHALL BE MADE WITHOUT THE EXPRESSED WRITTEN CONSENT OF ELECTRICAL CONSULTANTS, INC.

DRAWN BY: SAM	DATE: 02/22/2024	WOODLAND PULP, LLC WOODLAND FISH LIFT PASSAGE
CHECKED BY: CMM	DATE: 02/22/2024	FLCP PLC RACK 1, SLOT 3 RELAY OUTPUT MODULE
APPROVED BY: CMH	DATE: 02/22/2024	TECHNOLOGY: HYDRO / DRAWING CATEGORY: SCHEMATICS
SCALE: NONE	PROJECT NO.: ARL-007	DWG: EE-DD-013 / REV: 0

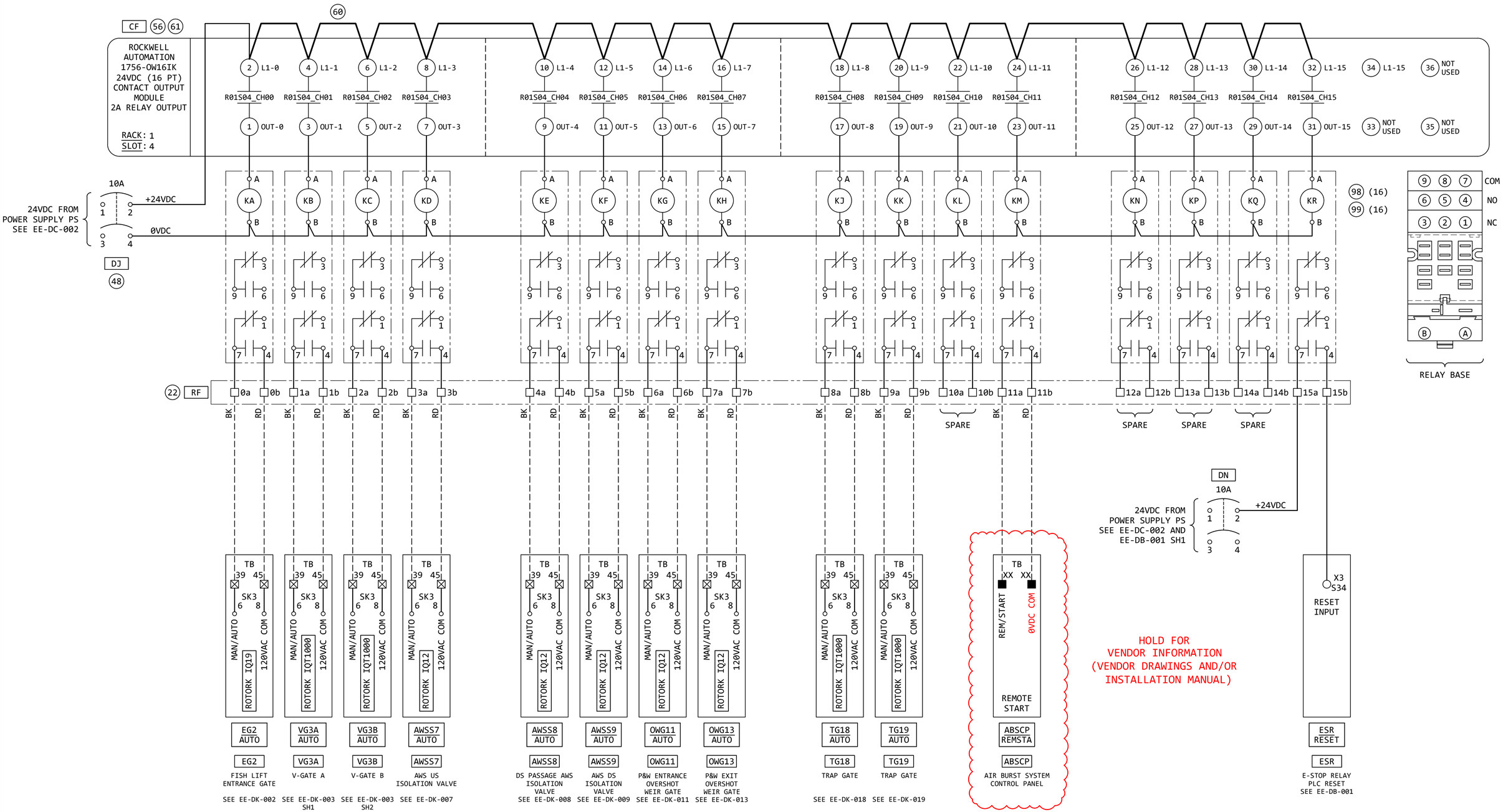

REVISION

REV	DATE	DR	CK	AP	DESCRIPTION
0	03/28/2025	SAM	CMM	CMH	ISSUED FOR CONSTRUCTION

EGI "Engineering with Distinction"
ELECTRICAL CONSULTANTS, INC.

THIS DRAWING IS THE PROPERTY OF ELECTRICAL CONSULTANTS, INC. AND IS TO BE USED ONLY FOR THE SPECIFIC PROJECT IDENTIFIED ON THE DRAWING. NO REVISIONS SHALL BE MADE WITHOUT THE EXPRESSED WRITTEN CONSENT OF ELECTRICAL CONSULTANTS, INC.

DRAWN BY: SAM	DATE: 02/22/2024	WOODLAND PULP, LLC WOODLAND FISH LIFT PASSAGE
CHECKED BY: CMM	DATE: 02/22/2024	FLCP PLC RACK 1, SLOT 4 RELAY OUTPUT MODULE
APPROVED BY: CMH	DATE: 02/22/2024	TECHNOLOGY: HYDRO / DRAWING CATEGORY: SCHEMATICS
SCALE: NONE	PROJECT NO.: ARL-007	DWG: EE-DD-014 / REV: 0

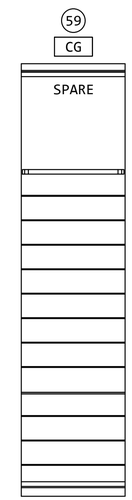

1756-N2
SLOT FILLER MODULE
(SPARE SLOT)
RACK 1, SLOT 5

REVISION					
REV	DATE	DR	CK	AP	DESCRIPTION
0	03/28/2025	SAM	CMM	CMH	ISSUED FOR CONSTRUCTION

"Engineering with Distinction"
ELECTRICAL CONSULTANTS, INC.

THIS DRAWING IS THE PROPERTY OF ELECTRICAL CONSULTANTS, INC. AND IS TO BE USED ONLY FOR THE SPECIFIC PROJECT IDENTIFIED ON THE DRAWING. NO REVISIONS SHALL BE MADE WITHOUT THE EXPRESSED WRITTEN CONSENT OF ELECTRICAL CONSULTANTS, INC.

DRAWN BY: SAM	DATE: 02/22/2024	WOODLAND PULP, LLC WOODLAND FISH LIFT PASSAGE
CHECKED BY: CMM	DATE: 02/22/2024	FLCP PLC RACK 1, SLOT 5 SLOT FILLER MODULE (SPARE SLOT)
APPROVED BY: CMH	DATE: 02/22/2024	TECHNOLOGY: HYDRO / DRAWING CATEGORY: SCHEMATICS
SCALE: NONE	PROJECT NO.: ARL-007	DWG: EE-DD-015 / REV: 0

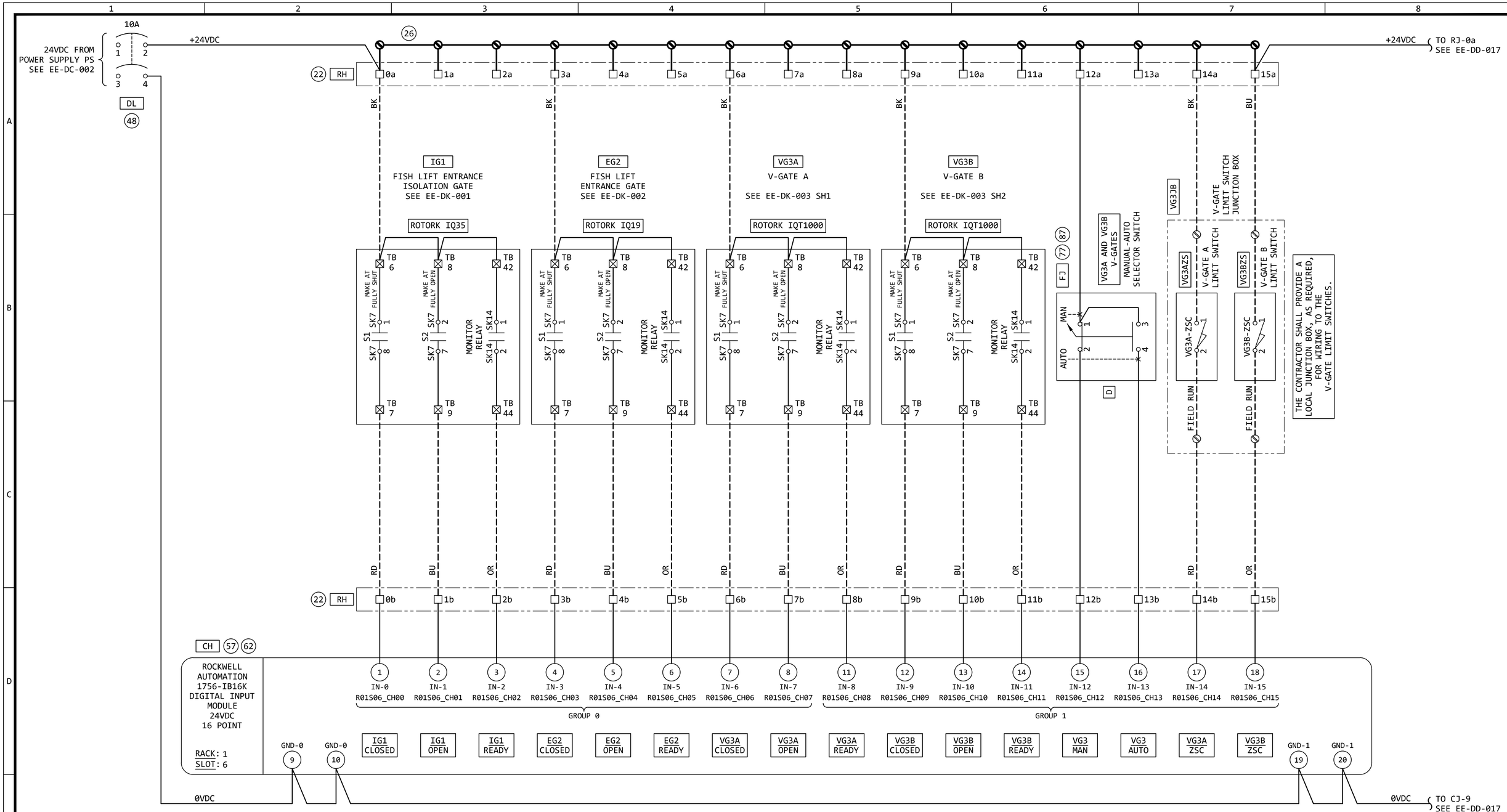

REVISION

REV	DATE	DR	CK	AP	DESCRIPTION
0	03/28/2025	SAM	CMM	CMH	ISSUED FOR CONSTRUCTION

"Engineering with Distinction"
ELECTRICAL CONSULTANTS, INC.

THIS DRAWING IS THE PROPERTY OF ELECTRICAL CONSULTANTS, INC. AND IS TO BE USED ONLY FOR THE SPECIFIC PROJECT IDENTIFIED ON THE DRAWING. NO REVISIONS SHALL BE MADE WITHOUT THE EXPRESSED WRITTEN CONSENT OF ELECTRICAL CONSULTANTS, INC.

DRAWN BY: SAM	DATE: 02/22/2024	WOODLAND PULP, LLC WOODLAND FISH LIFT PASSAGE
CHECKED BY: CMM	DATE: 02/22/2024	FLCP PLC RACK 1, SLOT 6 DIGITAL INPUT MODULE
APPROVED BY: CMH	DATE: 02/22/2024	TECHNOLOGY: HYDRO / DRAWING CATEGORY: SCHEMATICS
SCALE: NONE	PROJECT NO.: ARL-007	DWG: EE-DD-016 / REV: 0

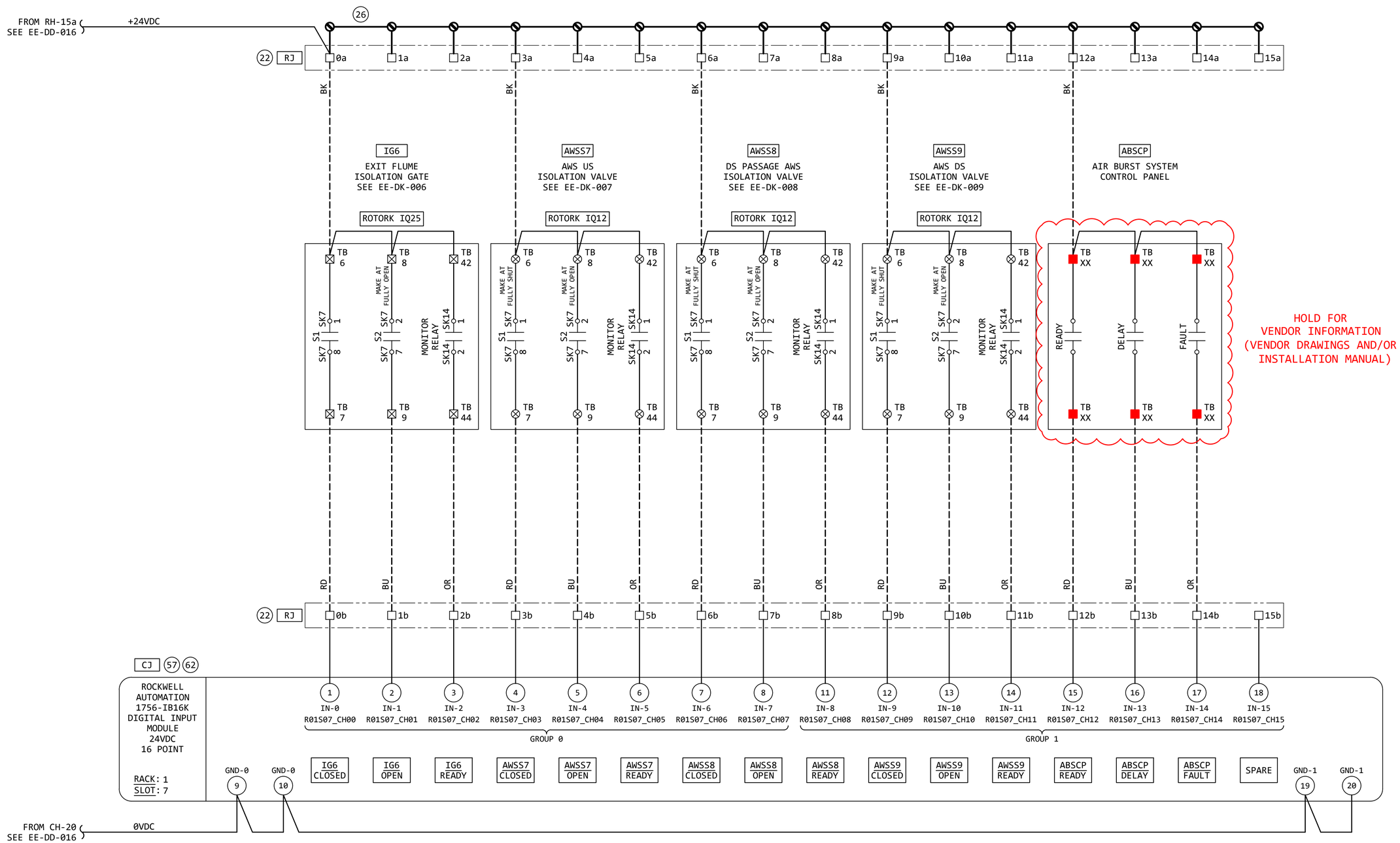

REVISION

REV	DATE	DR	CK	AP	DESCRIPTION
0	03/28/2025	SAM	CMM	CMH	ISSUED FOR CONSTRUCTION

ECI "Engineering with Distinction"
ELECTRICAL CONSULTANTS, INC.

THIS DRAWING IS THE PROPERTY OF ELECTRICAL CONSULTANTS, INC. AND IS TO BE USED ONLY FOR THE SPECIFIC PROJECT IDENTIFIED ON THE DRAWING. NO REVISIONS SHALL BE MADE WITHOUT THE EXPRESSED WRITTEN CONSENT OF ELECTRICAL CONSULTANTS, INC.

DRAWN BY: SAM	DATE: 02/22/2024	WOODLAND PULP, LLC WOODLAND FISH LIFT PASSAGE	
CHECKED BY: CMM	DATE: 02/22/2024	FLCP PLC RACK 1, SLOT 7 DIGITAL INPUT MODULE	
APPROVED BY: CMH	DATE: 02/22/2024	TECHNOLOGY: HYDRO	DRAWING CATEGORY: SCHEMATICS
SCALE: NONE	PROJECT NO.: ARL-007	DWG: EE-DD-017	REV: 0

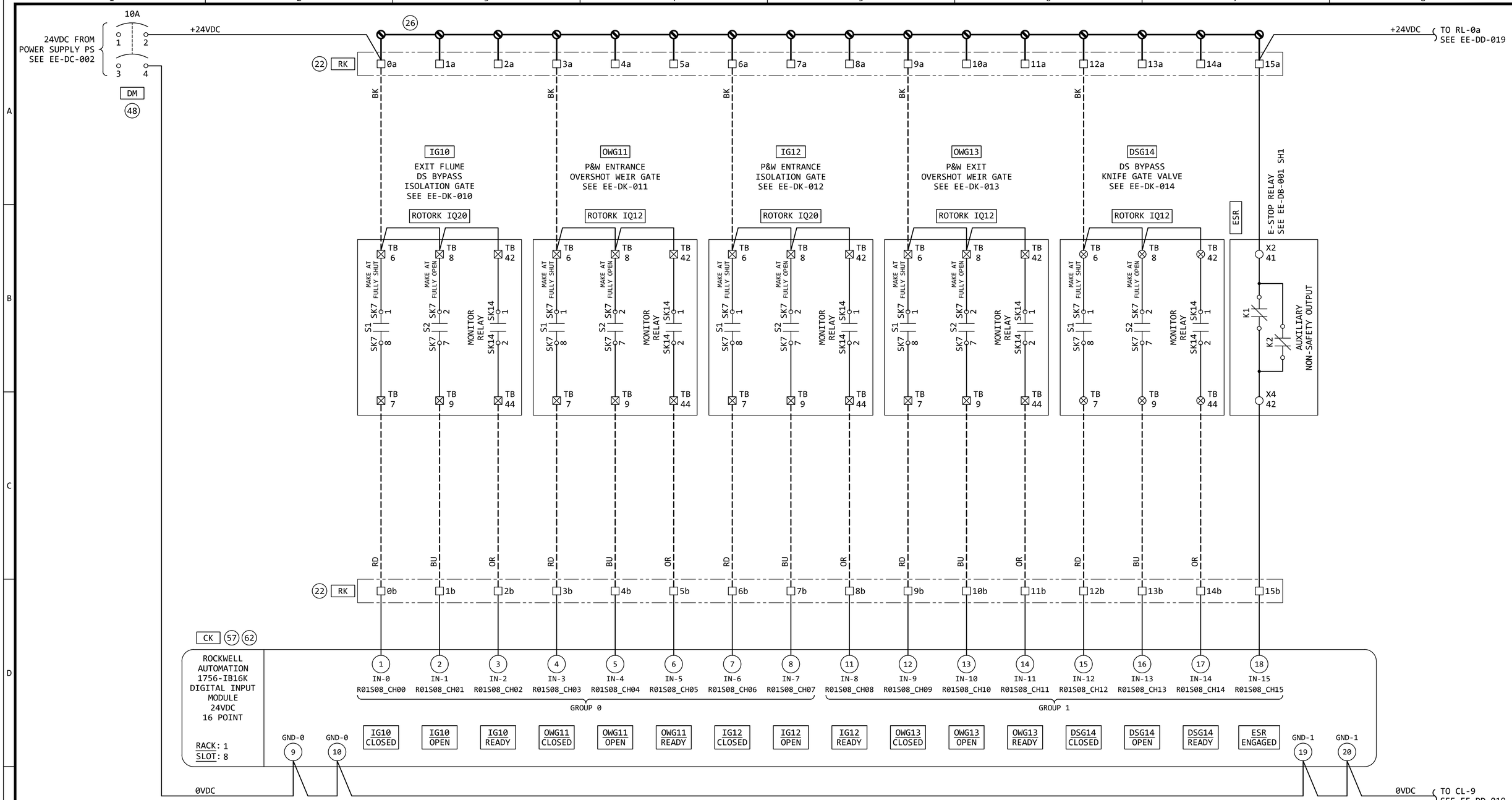

REVISION

REV	DATE	DR	CK	AP	DESCRIPTION
0	03/28/2025	SAM	CMM	CMH	ISSUED FOR CONSTRUCTION

"Engineering with Distinction"
ELECTRICAL CONSULTANTS, INC.

THIS DRAWING IS THE PROPERTY OF ELECTRICAL CONSULTANTS, INC. AND IS TO BE USED ONLY FOR THE SPECIFIC PROJECT IDENTIFIED ON THE DRAWING. NO REVISIONS SHALL BE MADE WITHOUT THE EXPRESSED WRITTEN CONSENT OF ELECTRICAL CONSULTANTS, INC.

DRAWN BY: SAM	DATE: 02/22/2024	WOODLAND PULP, LLC WOODLAND FISH LIFT PASSAGE
CHECKED BY: CMM	DATE: 02/22/2024	FLCP PLC RACK 1, SLOT 8 DIGITAL INPUT MODULE
APPROVED BY: CMH	DATE: 02/22/2024	TECHNOLOGY: HYDRO / DRAWING CATEGORY: SCHEMATICS
SCALE: NONE	PROJECT NO.: ARL-007	DWG: EE-DD-018 / REV: 0

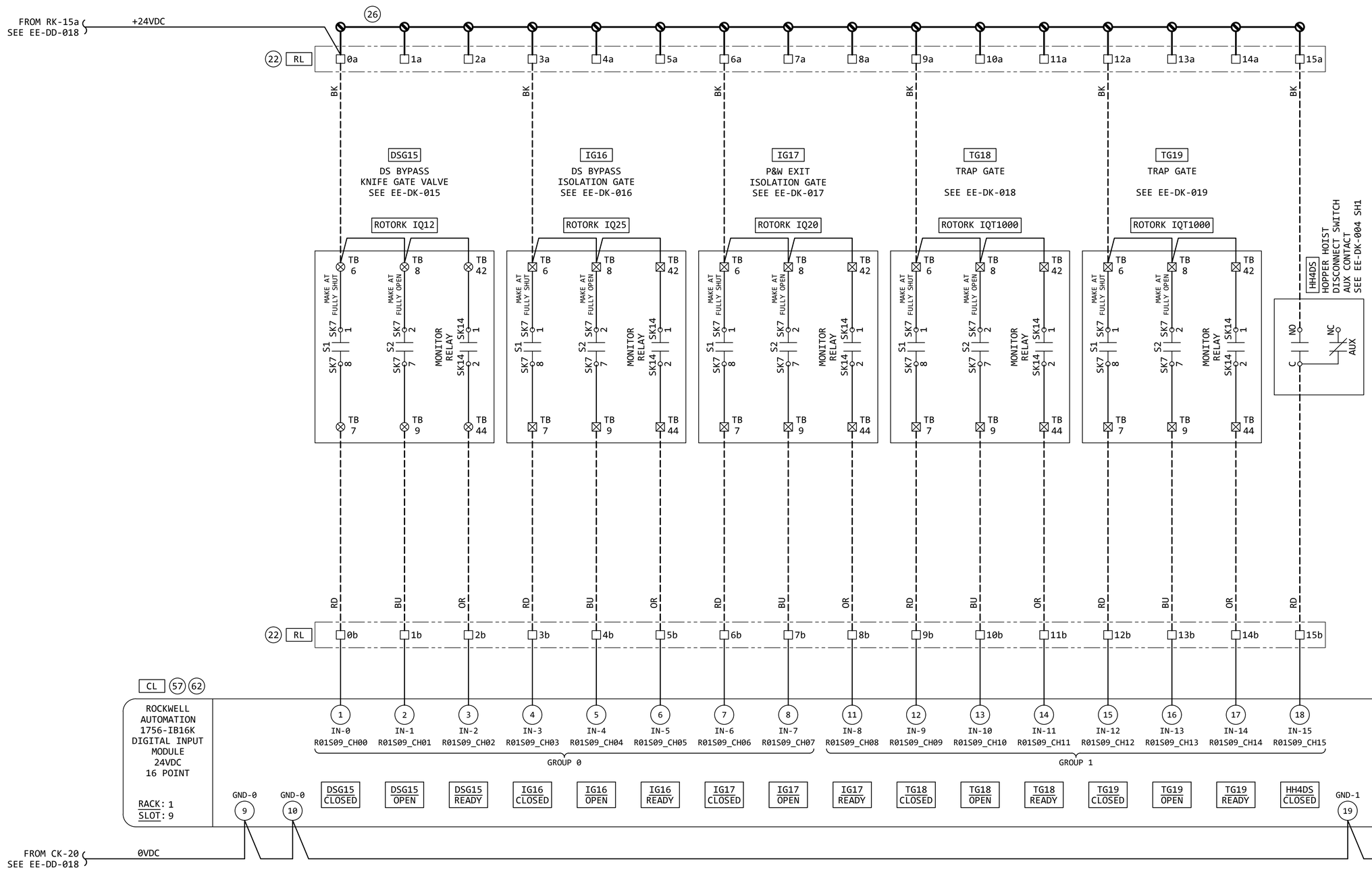

REVISION

REV	DATE	DR	CK	AP	DESCRIPTION
0	03/28/2025	SAM	CMM	CMH	ISSUED FOR CONSTRUCTION

ECI "Engineering with Distinction"
ELECTRICAL CONSULTANTS, INC.

THIS DRAWING IS THE PROPERTY OF ELECTRICAL CONSULTANTS, INC. AND IS TO BE USED ONLY FOR THE SPECIFIC PROJECT IDENTIFIED ON THE DRAWING. NO REVISIONS SHALL BE MADE WITHOUT THE EXPRESSED WRITTEN CONSENT OF ELECTRICAL CONSULTANTS, INC.

DRAWN BY: SAM	DATE: 02/22/2024	WOODLAND PULP, LLC WOODLAND FISH LIFT PASSAGE
CHECKED BY: CMM	DATE: 02/22/2024	FLCP PLC RACK 1, SLOT 9 DIGITAL INPUT MODULE
APPROVED BY: CMH	DATE: 02/22/2024	TECHNOLOGY: HYDRO / DRAWING CATEGORY: SCHEMATICS
SCALE: NONE	PROJECT NO.: ARL-007	DWG: EE-DD-019 / REV: 0

IG1
FISH LIFT ENTRANCE ISOLATION GATE
8'W x 14'H (112 FT^2) GATE
MAX DELTA: 10.5'

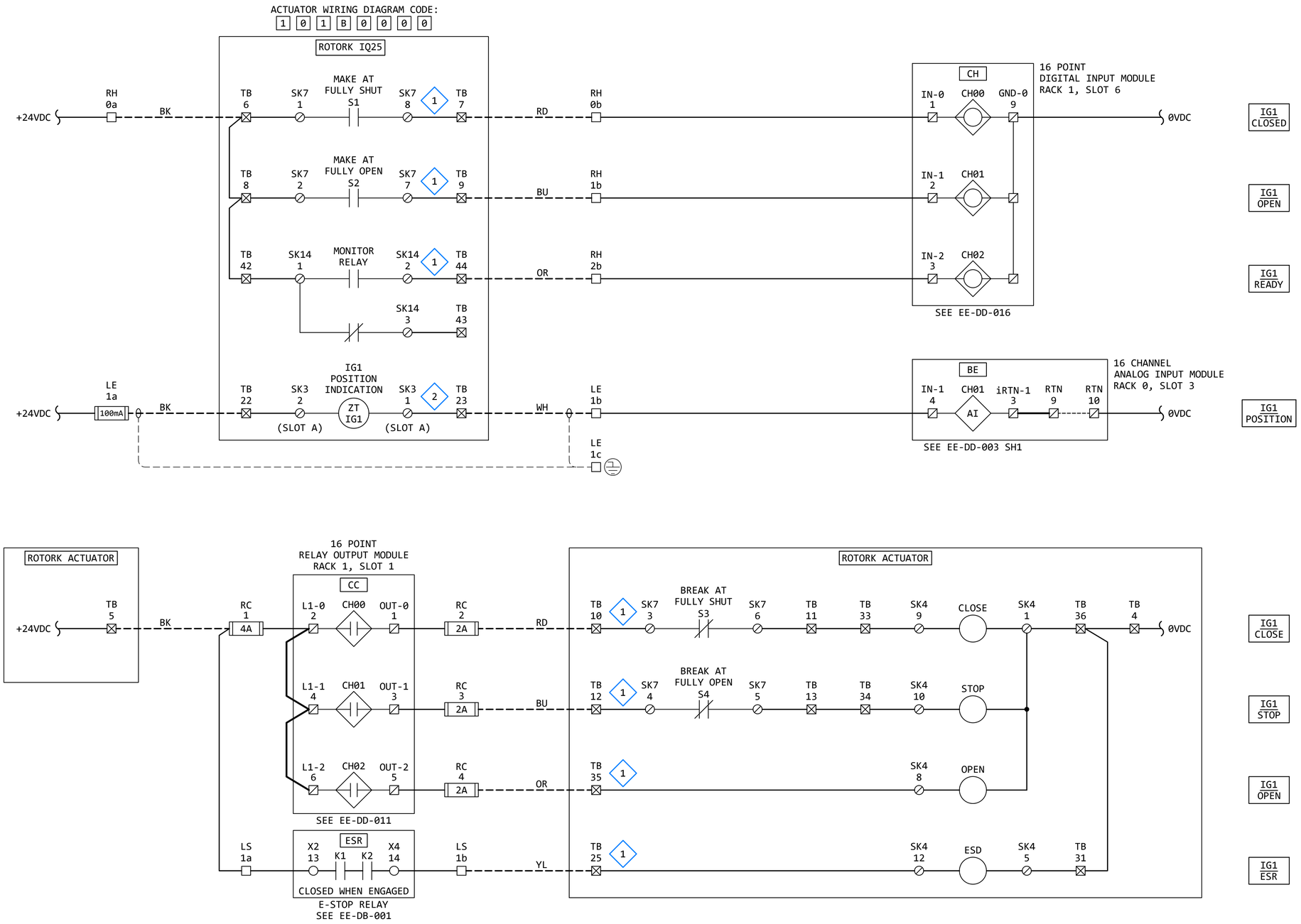

GENERAL NOTES:

1. THE DESIGN SHOWN IS BASED ON ROTORK PUBLICATION PUB002-041-00, ISSUE 02/23. SEE KEYED NOTES FOR FURTHER DETAILS.
2. TERMINAL NUMBERS ARE SUBJECT TO CHANGE. REFER TO CIRCUIT DIAGRAMS SUPPLIED WITH EQUIPMENT.

KEYED NOTES:

1. ACTUATOR WIRING - BASIC: IQ ACTUATOR BASIC CIRCUIT DIAGRAM 100B0000 (PUB002-041-00, PAGE 12)
2. ACTUATOR WIRING - OPTIONAL: REQUIRES "VALVE POSITION - CPT" OPTION. (PUB002-041-00, PAGE 13)

REVISION

REV	DATE	DR	CK	AP	DESCRIPTION
0	03/28/2025	SAM	CMM	CMH	ISSUED FOR CONSTRUCTION

"Engineering with Distinction"
ELECTRICAL CONSULTANTS, INC.

THIS DRAWING IS THE PROPERTY OF ELECTRICAL CONSULTANTS, INC. AND IS TO BE USED ONLY FOR THE SPECIFIC PROJECT IDENTIFIED ON THE DRAWING. NO REVISIONS SHALL BE MADE WITHOUT THE EXPRESSED WRITTEN CONSENT OF ELECTRICAL CONSULTANTS, INC.

DRAWN BY: SAM	DATE: 02/22/2024	WOODLAND PULP, LLC WOODLAND FISH LIFT PASSAGE
CHECKED BY: CMM	DATE: 02/22/2024	ELEMENTARY WIRING DIAGRAM FISH LIFT ENTRANCE ISOLATION GATE (IG1)
APPROVED BY: CMH	DATE: 02/22/2024	TECHNOLOGY: HYDRO / DRAWING CATEGORY: SCHEMATICS
SCALE: NONE	PROJECT NO.: ARL-007	DWG: EE-DK-001 / REV: 0

EG2
FISH LIFT ENTRANCE GATE
8'W x 12.5'H (100 FT^2)
HINGED GATE

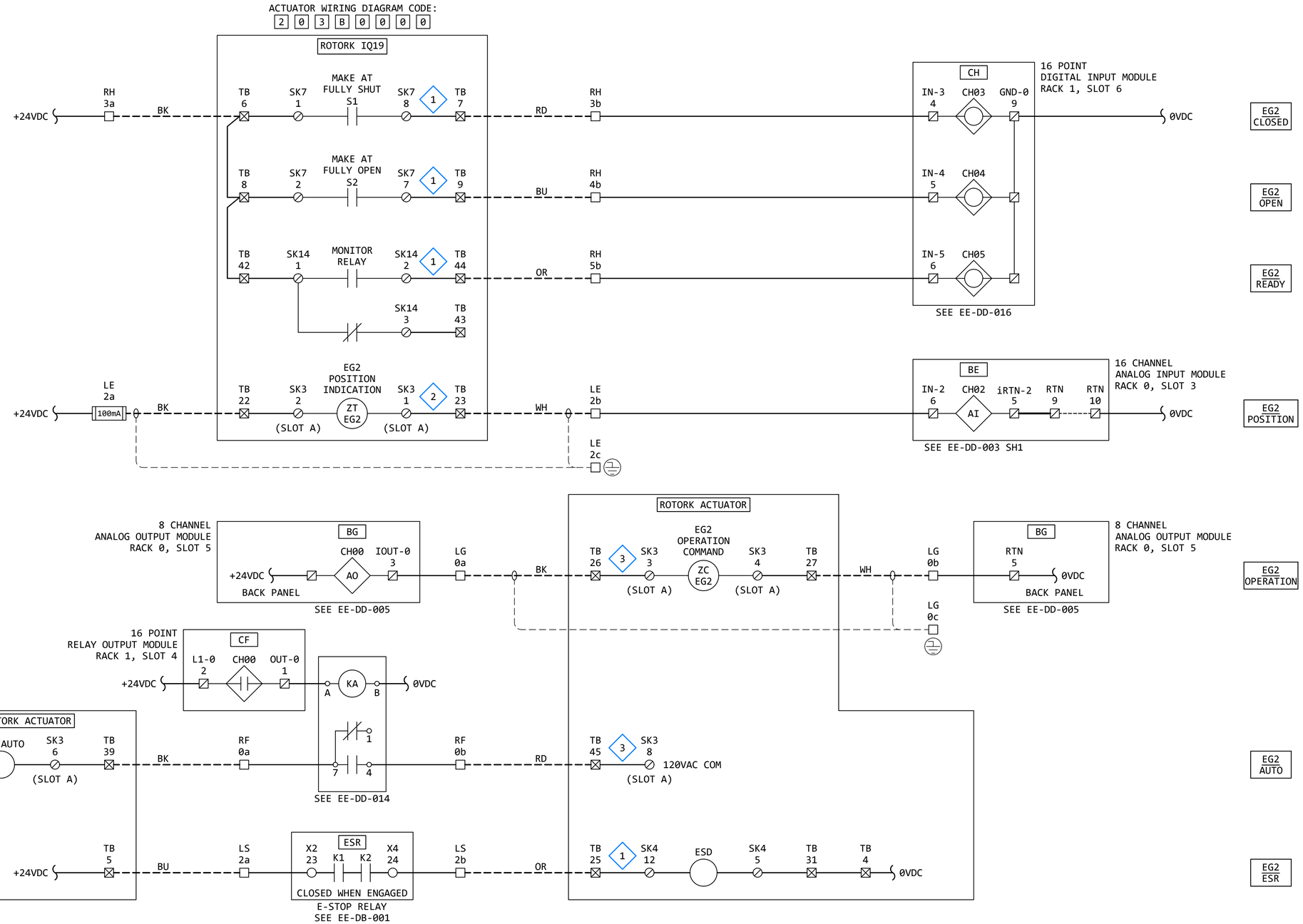

GENERAL NOTES:

1. THE DESIGN SHOWN IS BASED ON ROTORK PUBLICATION PUB002-041-00, ISSUE 02/23. SEE KEYED NOTES FOR FURTHER DETAILS.
2. TERMINAL NUMBERS ARE SUBJECT TO CHANGE. REFER TO CIRCUIT DIAGRAMS SUPPLIED WITH EQUIPMENT.

KEYED NOTES:

1. ACTUATOR WIRING - BASIC: IQ ACTUATOR BASIC CIRCUIT DIAGRAM 100B0000 (PUB002-041-00, PAGE 12)
2. ACTUATOR WIRING - OPTIONAL: REQUIRES "VALVE POSITION - CPT" OPTION. (PUB002-041-00, PAGE 13)
3. ACTUATOR WIRING - OPTIONAL: REQUIRES "ANALOGUE POSITION CONTROL FOLOMATIC" OPTION. (PUB002-041-00, PAGE 13)

REVISION

REV	DATE	DR	CK	AP	DESCRIPTION
0	03/28/2025	SAM	CMM	CMH	ISSUED FOR CONSTRUCTION

"Engineering with Distinction"
ELECTRICAL CONSULTANTS, INC.

THIS DRAWING IS THE PROPERTY OF ELECTRICAL CONSULTANTS, INC. AND IS TO BE USED ONLY FOR THE SPECIFIC PROJECT IDENTIFIED ON THE DRAWING. NO REVISIONS SHALL BE MADE WITHOUT THE EXPRESSED WRITTEN CONSENT OF ELECTRICAL CONSULTANTS, INC.

DRAWN BY: SAM	DATE: 02/22/2024	WOODLAND PULP, LLC WOODLAND FISH LIFT PASSAGE
CHECKED BY: CMM	DATE: 02/22/2024	ELEMENTARY WIRING DIAGRAM FISH LIFT ENTRANCE GATE (EG2)
APPROVED BY: CMH	DATE: 02/22/2024	TECHNOLOGY: HYDRO / DRAWING CATEGORY: SCHEMATICS
SCALE: NONE	PROJECT NO.: ARL-007	DWG: EE-DK-002 / REV: 0

VG3A
V-GATE A
3'W x 12'H V-GATE

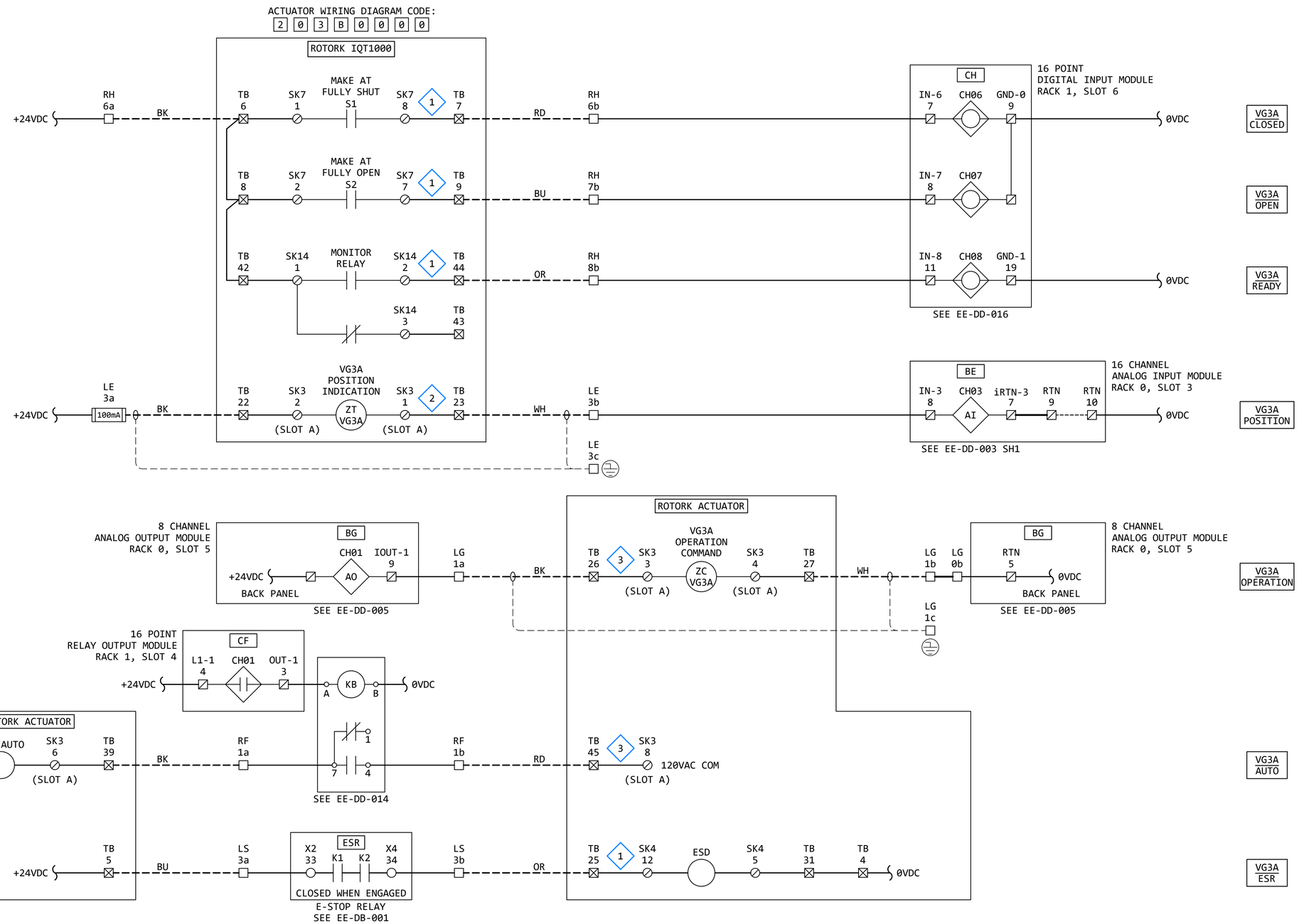

GENERAL NOTES:

1. THE DESIGN SHOWN IS BASED ON ROTORK PUBLICATION PUB002-041-00, ISSUE 02/23. SEE KEYED NOTES FOR FURTHER DETAILS.
2. TERMINAL NUMBERS ARE SUBJECT TO CHANGE. REFER TO CIRCUIT DIAGRAMS SUPPLIED WITH EQUIPMENT.

KEYED NOTES:

1. ACTUATOR WIRING - BASIC: IQ ACTUATOR BASIC CIRCUIT DIAGRAM 100B0000 (PUB002-041-00, PAGE 12)
2. ACTUATOR WIRING - OPTIONAL: REQUIRES "VALVE POSITION - CPT" OPTION. (PUB002-041-00, PAGE 13)
3. ACTUATOR WIRING - OPTIONAL: REQUIRES "ANALOGUE POSITION CONTROL FOLOMATIC" OPTION. (PUB002-041-00, PAGE 13)

REVISION

REV	DATE	DR	CK	AP	DESCRIPTION
0	03/28/2025	SAM	CMM	CMH	ISSUED FOR CONSTRUCTION

"Engineering with Distinction"
ELECTRICAL CONSULTANTS, INC.

THIS DRAWING IS THE PROPERTY OF ELECTRICAL CONSULTANTS, INC. AND IS TO BE USED ONLY FOR THE SPECIFIC PROJECT IDENTIFIED ON THE DRAWING. NO REVISIONS SHALL BE MADE WITHOUT THE EXPRESSED WRITTEN CONSENT OF ELECTRICAL CONSULTANTS, INC.

DRAWN BY: SAM	DATE: 02/22/2024	WOODLAND PULP, LLC WOODLAND FISH LIFT PASSAGE
CHECKED BY: CMM	DATE: 02/22/2024	ELEMENTARY WIRING DIAGRAM V-GATE A (VG3A)
APPROVED BY: CMH	DATE: 02/22/2024	TECHNOLOGY: HYDRO / DRAWING CATEGORY: SCHEMATICS
SCALE: NONE	PROJECT NO.: ARL-007	DWG: EE-DK-003 SH1 / REV: 0

VG3B
V-GATE B
3'W x 12'H V-GATE

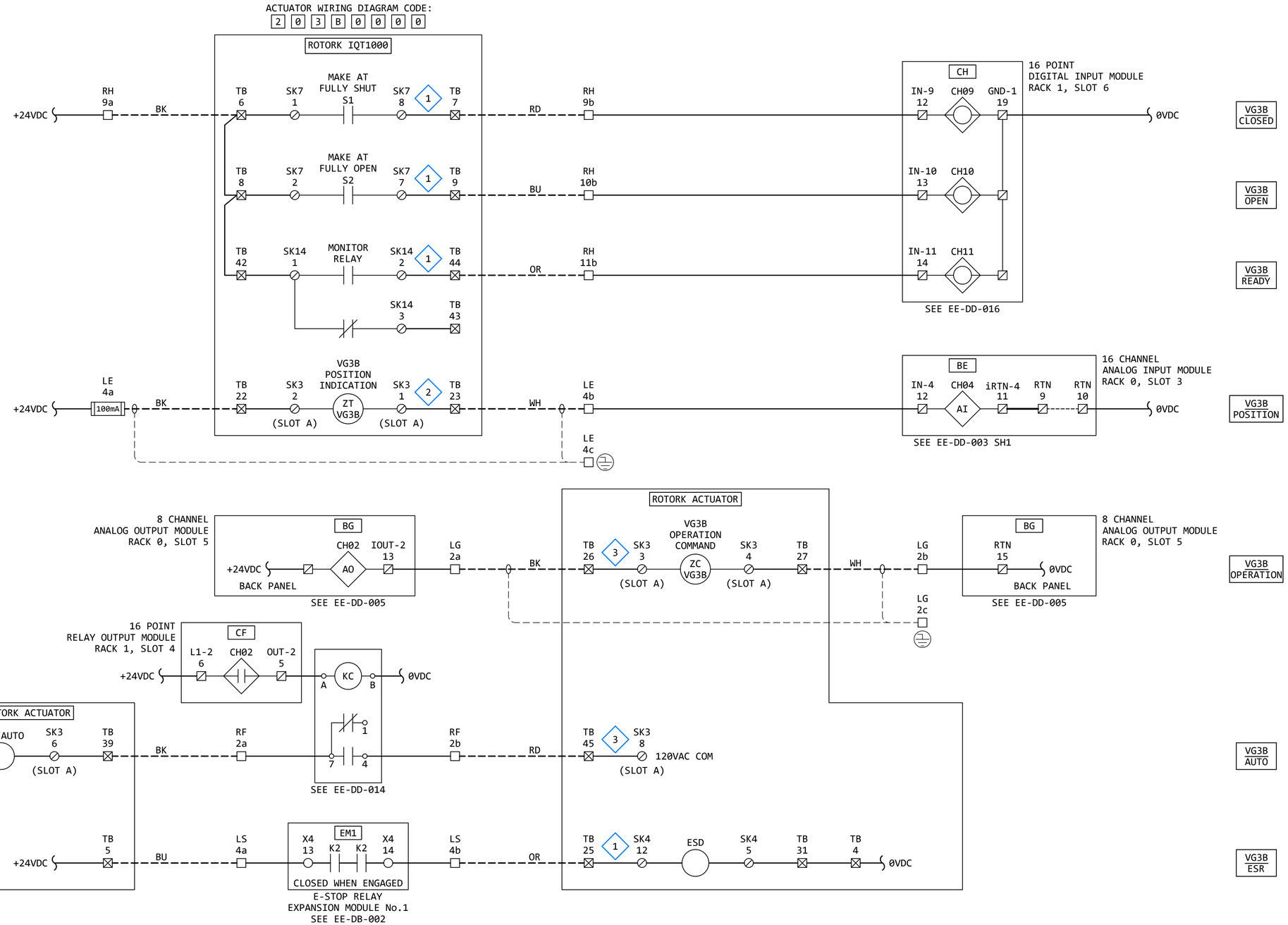

GENERAL NOTES:

1. THE DESIGN SHOWN IS BASED ON ROTORK PUBLICATION PUB002-041-00, ISSUE 02/23. SEE KEYED NOTES FOR FURTHER DETAILS.
2. TERMINAL NUMBERS ARE SUBJECT TO CHANGE. REFER TO CIRCUIT DIAGRAMS SUPPLIED WITH EQUIPMENT.

KEYED NOTES:

1. ACTUATOR WIRING - BASIC: IQ ACTUATOR BASIC CIRCUIT DIAGRAM 100B0000 (PUB002-041-00, PAGE 12)
2. ACTUATOR WIRING - OPTIONAL: REQUIRES "VALVE POSITION - CPT" OPTION. (PUB002-041-00, PAGE 13)
3. ACTUATOR WIRING - OPTIONAL: REQUIRES "ANALOGUE POSITION CONTROL FOLOMATIC" OPTION. (PUB002-041-00, PAGE 13)

REVISION

REV	DATE	DR	CK	AP	DESCRIPTION
0	03/28/2025	SAM	CMM	CMH	ISSUED FOR CONSTRUCTION

EGI ELECTRICAL CONSULTANTS, INC.
"Engineering with Distinction"

THIS DRAWING IS THE PROPERTY OF ELECTRICAL CONSULTANTS, INC. AND IS TO BE USED ONLY FOR THE SPECIFIC PROJECT IDENTIFIED ON THE DRAWING. NO REVISIONS SHALL BE MADE WITHOUT THE EXPRESSED WRITTEN CONSENT OF ELECTRICAL CONSULTANTS, INC.

DRAWN BY: SAM	DATE: 02/22/2024	WOODLAND PULP, LLC WOODLAND FISH LIFT PASSAGE
CHECKED BY: CMM	DATE: 02/22/2024	ELEMENTARY WIRING DIAGRAM V-GATE B (VG3B)
APPROVED BY: CMH	DATE: 02/22/2024	TECHNOLOGY: HYDRO / DRAWING CATEGORY: SCHEMATICS
SCALE: NONE	PROJECT NO.: ARL-007	DWG: EE-DK-003 SH2 / REV: 0

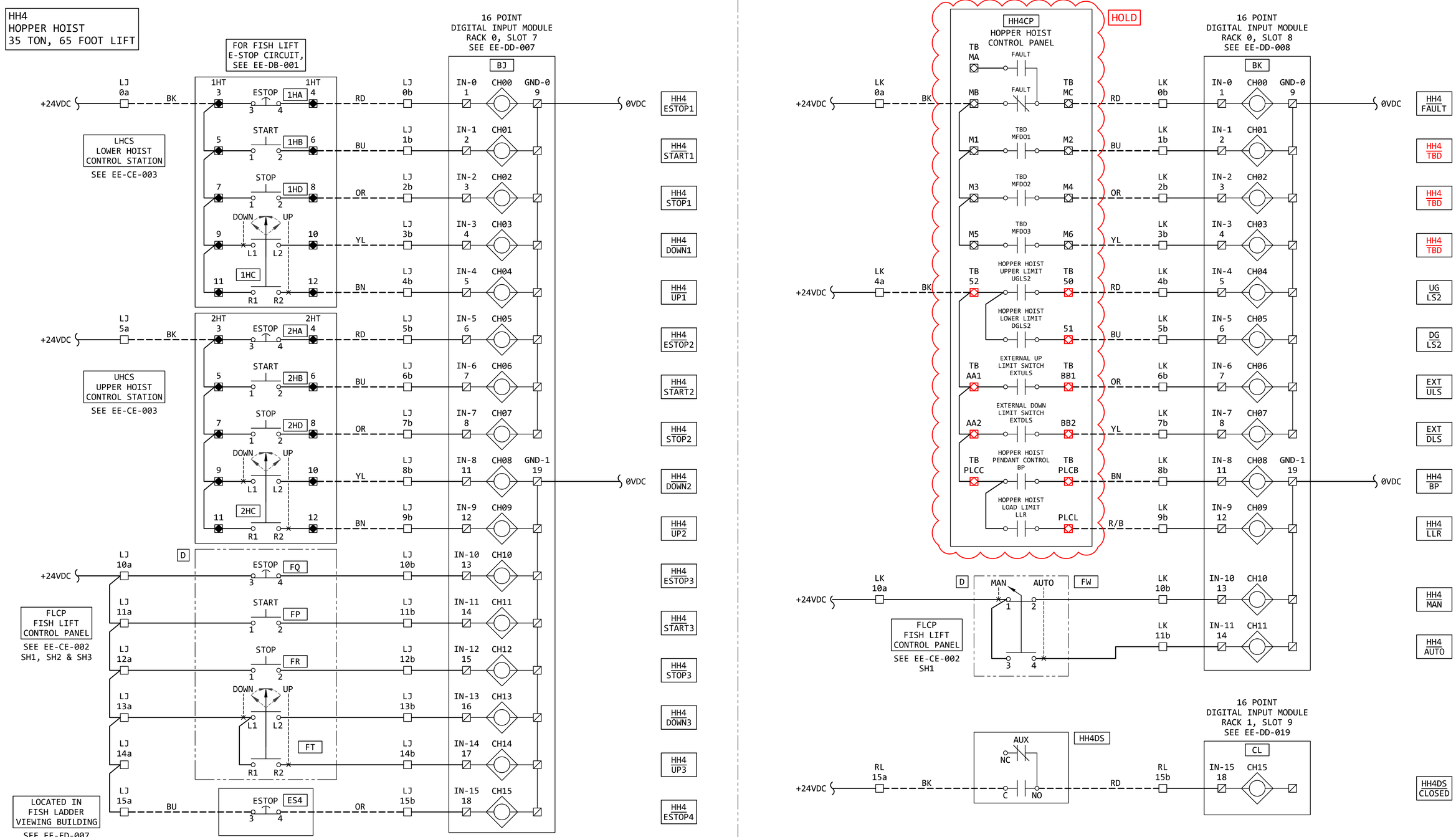

GENERAL NOTES:

1. THE DESIGN SHOWN IS BASED ON MAGNETEK IMPULSE G+/VG+ SERIES 5 TECHNICAL MANUAL, DATED AUGUST 2023.
2. TERMINAL NUMBERS ARE SUBJECT TO CHANGE. REFER TO CIRCUIT DIAGRAMS SUPPLIED WITH EQUIPMENT.

HOLD FOR VENDOR INFORMATION (VENDOR DRAWING AND/OR INSTALLATION MANUAL)

REVISION

REV	DATE	DR	CK	AP	DESCRIPTION
0	03/28/2025	SAM	CMM	CMH	ISSUED FOR CONSTRUCTION

EGI ELECTRICAL CONSULTANTS, INC.

THIS DRAWING IS THE PROPERTY OF ELECTRICAL CONSULTANTS, INC. AND IS TO BE USED ONLY FOR THE SPECIFIC PROJECT IDENTIFIED ON THE DRAWING. NO REVISIONS SHALL BE MADE WITHOUT THE EXPRESSED WRITTEN CONSENT OF ELECTRICAL CONSULTANTS, INC.

DRAWN BY: SAM	DATE: 02/22/2024	WOODLAND PULP, LLC WOODLAND FISH LIFT PASSAGE
CHECKED BY: CMM	DATE: 02/22/2024	ELEMENTARY WIRING DIAGRAM HOPPER HOIST (HH4)
APPROVED BY: CMH	DATE: 02/22/2024	TECHNOLOGY: HYDRO / DRAWING CATEGORY: SCHEMATICS
SCALE: NONE	PROJECT NO.: ARL-007	DWG: EE-DK-004 SH1 / REV: 0

HH4
HOPPER HOIST
35 TON, 65 FOOT LIFT

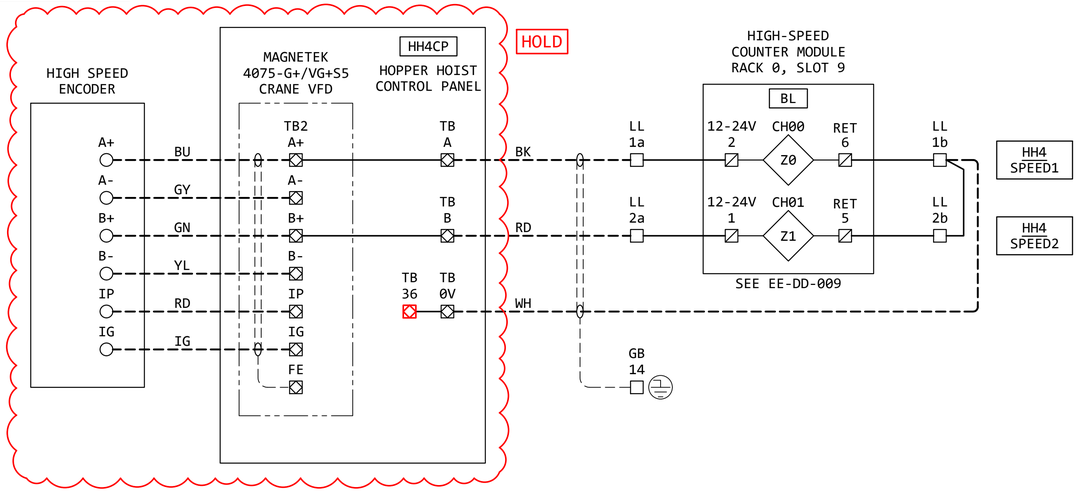

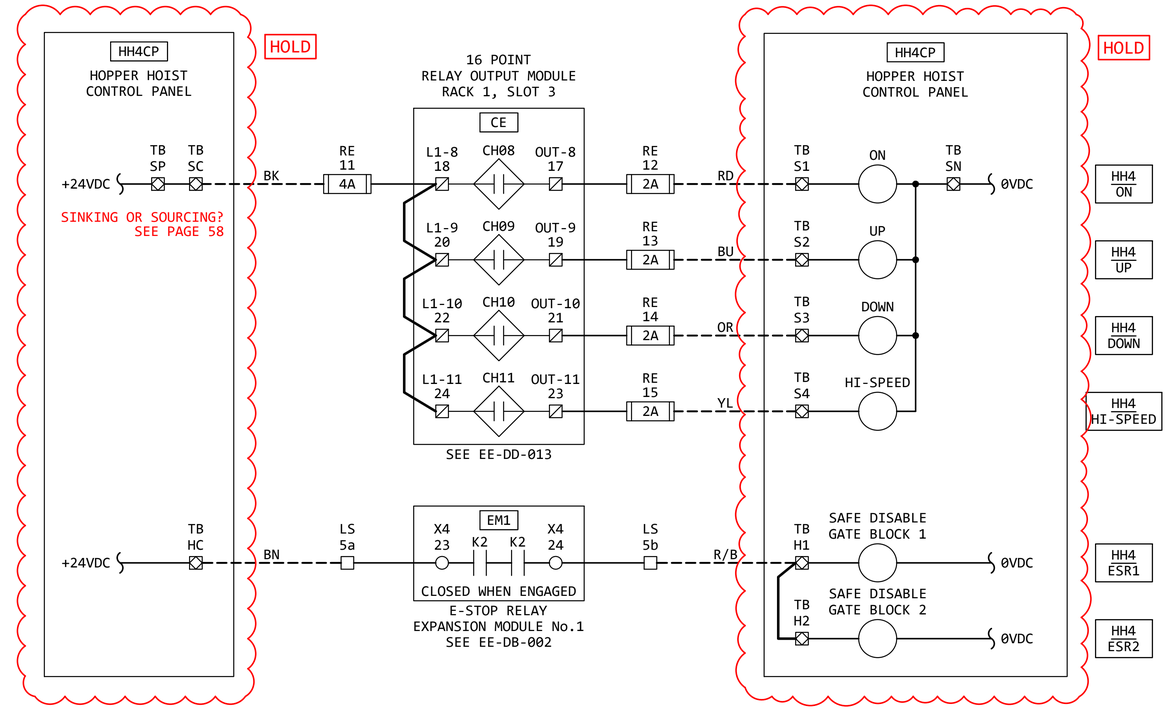

GENERAL NOTES:

1. THE DESIGN SHOWN IS BASED ON MAGNETEK IMPULSE G+/VG+ SERIES 5 TECHNICAL MANUAL, DATED AUGUST 2023.
2. TERMINAL NUMBERS ARE SUBJECT TO CHANGE. REFER TO CIRCUIT DIAGRAMS SUPPLIED WITH EQUIPMENT.

HOLD FOR VENDOR INFORMATION (VENDOR DRAWING AND/OR INSTALLATION MANUAL)

REVISION

REV	DATE	DR	CK	AP	DESCRIPTION
0	03/28/2025	SAM	CMM	CMH	ISSUED FOR CONSTRUCTION

"Engineering with Distinction"
ELECTRICAL CONSULTANTS, INC.
THIS DRAWING IS THE PROPERTY OF ELECTRICAL CONSULTANTS, INC. AND IS TO BE USED ONLY FOR THE SPECIFIC PROJECT IDENTIFIED ON THE DRAWING. NO REVISIONS SHALL BE MADE WITHOUT THE EXPRESSED WRITTEN CONSENT OF ELECTRICAL CONSULTANTS, INC.

DRAWN BY SAM	DATE 02/22/2024	WOODLAND PULP, LLC WOODLAND FISH LIFT PASSAGE	
CHECKED BY CMM	DATE 02/22/2024	ELEMENTARY WIRING DIAGRAM HOPPER HOIST (HH4)	
APPROVED BY CMH	DATE 02/22/2024	TECHNOLOGY HYDRO	DRAWING CATEGORY SCHEMATICS
SCALE NONE	PROJECT NO. ARL-007	DWG EE-DK-004 SH2	REV 0

IG6
EXIT FLUME ISOLATION GATE
8'W x 9.5'H (76 FT^2) GATE
MAX DELTA: 10.6'

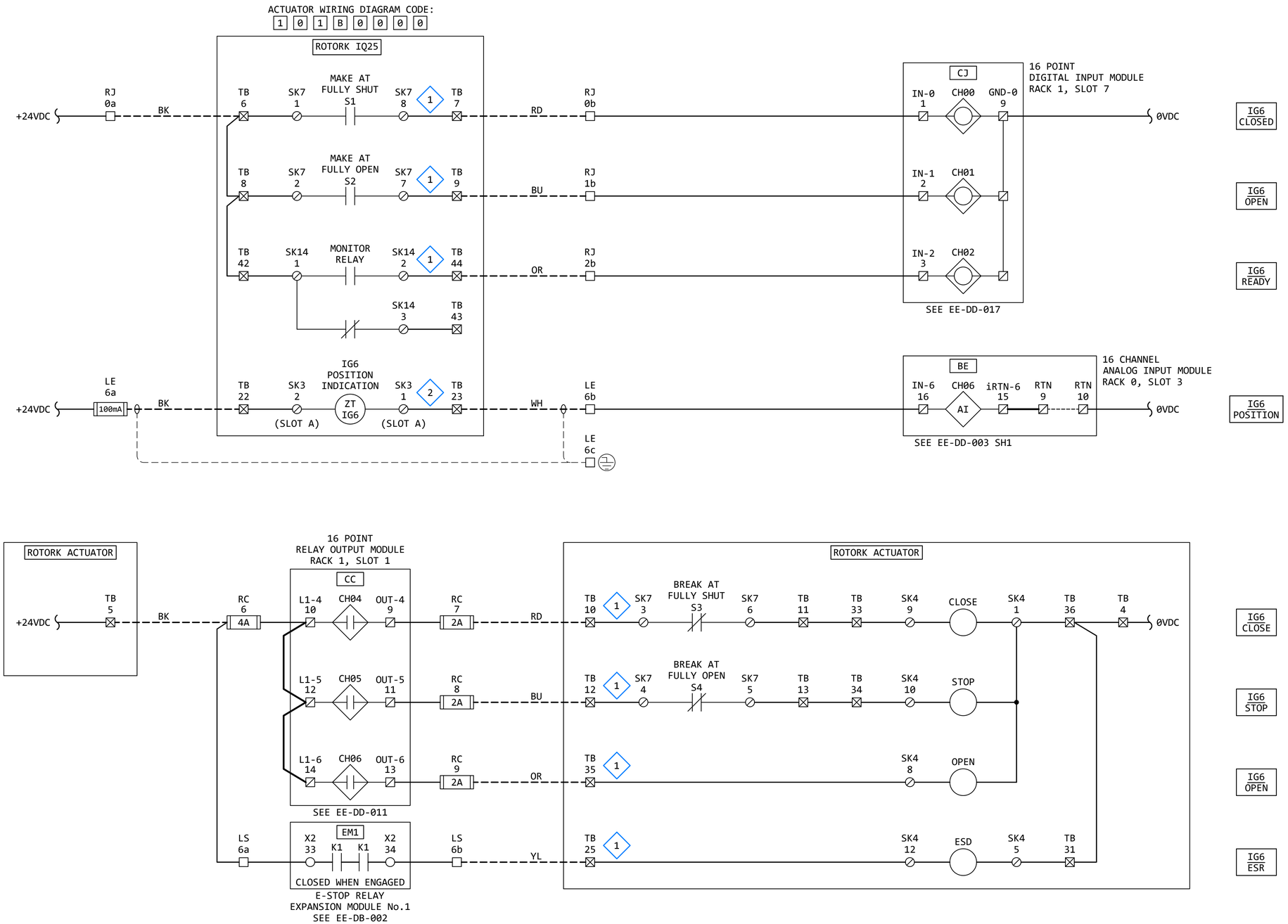

GENERAL NOTES:

1. THE DESIGN SHOWN IS BASED ON ROTORK PUBLICATION PUB002-041-00, ISSUE 02/23. SEE KEYED NOTES FOR FURTHER DETAILS.
2. TERMINAL NUMBERS ARE SUBJECT TO CHANGE. REFER TO CIRCUIT DIAGRAMS SUPPLIED WITH EQUIPMENT.

KEYED NOTES:

1. ACTUATOR WIRING - BASIC: IQ ACTUATOR BASIC CIRCUIT DIAGRAM 100B0000 (PUB002-041-00, PAGE 12)
2. ACTUATOR WIRING - OPTIONAL: REQUIRES "VALVE POSITION - CPT" OPTION. (PUB002-041-00, PAGE 13)

REVISION

REV	DATE	DR	CK	AP	DESCRIPTION
0	03/28/2025	SAM	CMM	CMH	ISSUED FOR CONSTRUCTION

EGI "Engineering with Distinction" ELECTRICAL CONSULTANTS, INC.

THIS DRAWING IS THE PROPERTY OF ELECTRICAL CONSULTANTS, INC. AND IS TO BE USED ONLY FOR THE SPECIFIC PROJECT IDENTIFIED ON THE DRAWING. NO REVISIONS SHALL BE MADE WITHOUT THE EXPRESSED WRITTEN CONSENT OF ELECTRICAL CONSULTANTS, INC.

DRAWN BY: SAM	DATE: 08/22/2024	WOODLAND PULP, LLC WOODLAND FISH LIFT PASSAGE
CHECKED BY: CMM	DATE: 08/22/2024	ELEMENTARY WIRING DIAGRAM EXIT FLUME ISOLATION GATE (IG6)
APPROVED BY: CMH	DATE: 08/22/2024	TECHNOLOGY: HYDRO DRAWING CATEGORY: SCHEMATICS
SCALE: NONE	PROJECT NO.: ARL-007	DWG: EE-DK-006 REV: 0

AWSS7
AWS US ISOLATION VALVE
30" BUTTERFLY VALVE

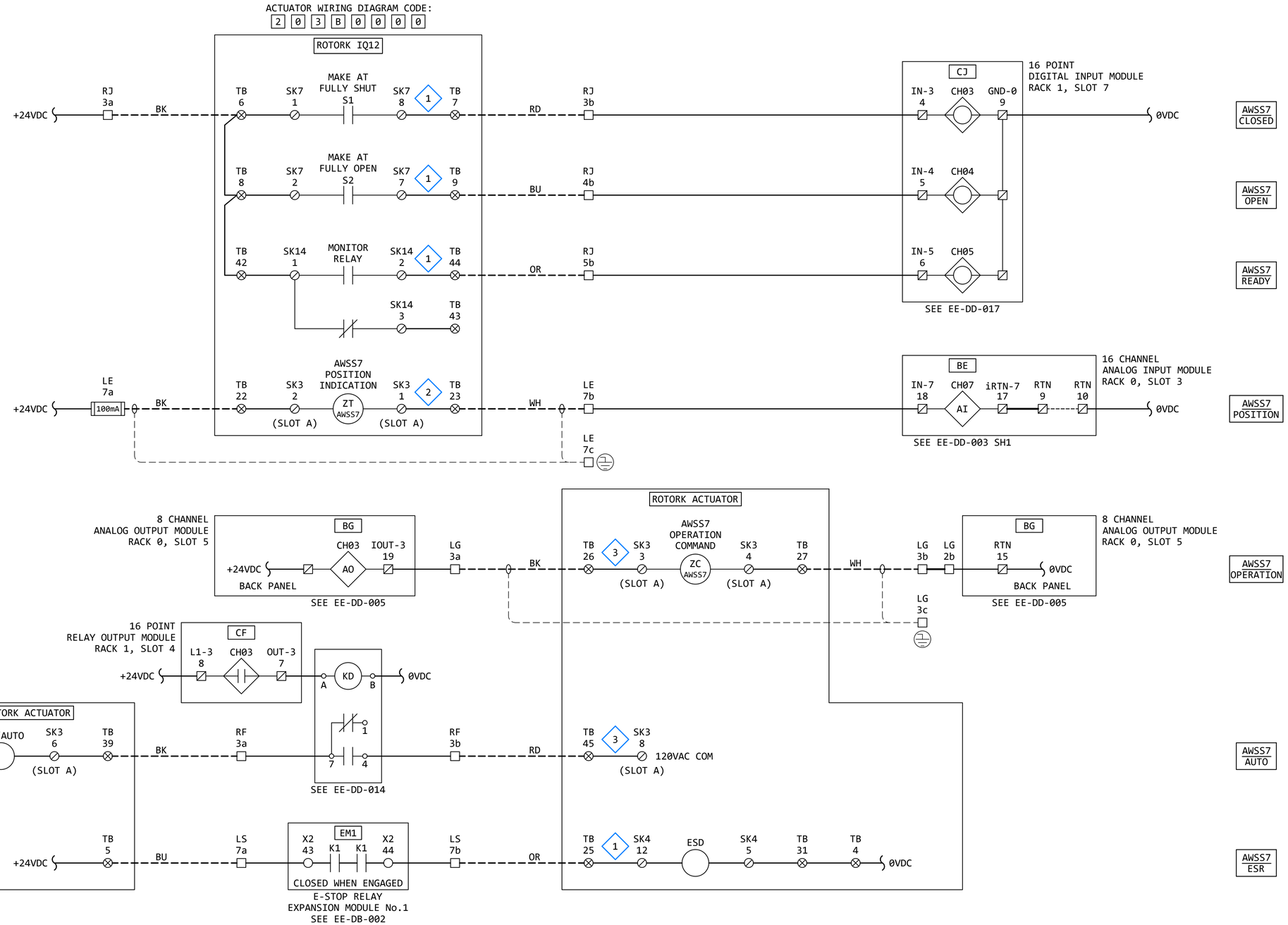

GENERAL NOTES:

1. THE DESIGN SHOWN IS BASED ON ROTORK PUBLICATION PUB002-041-00, ISSUE 02/23. SEE KEYED NOTES FOR FURTHER DETAILS.
2. TERMINAL NUMBERS ARE SUBJECT TO CHANGE. REFER TO CIRCUIT DIAGRAMS SUPPLIED WITH EQUIPMENT.

KEYED NOTES:

1. ACTUATOR WIRING - BASIC: IQ ACTUATOR BASIC CIRCUIT DIAGRAM 100B0000 (PUB002-041-00, PAGE 12)
2. ACTUATOR WIRING - OPTIONAL: REQUIRES "VALVE POSITION - CPT" OPTION. (PUB002-041-00, PAGE 13)
3. ACTUATOR WIRING - OPTIONAL: REQUIRES "ANALOGUE POSITION CONTROL FOLOMATIC" OPTION. (PUB002-041-00, PAGE 13)

REVISION

REV	DATE	DR	CK	AP	DESCRIPTION
0	03/28/2025	SAM	CMM	CMH	ISSUED FOR CONSTRUCTION

"Engineering with Distinction"
ELECTRICAL CONSULTANTS, INC.

THIS DRAWING IS THE PROPERTY OF ELECTRICAL CONSULTANTS, INC. AND IS TO BE USED ONLY FOR THE SPECIFIC PROJECT IDENTIFIED ON THE DRAWING. NO REVISIONS SHALL BE MADE WITHOUT THE EXPRESSED WRITTEN CONSENT OF ELECTRICAL CONSULTANTS, INC.

DRAWN BY: SAM	DATE: 08/22/2024	WOODLAND PULP, LLC WOODLAND FISH LIFT PASSAGE
CHECKED BY: CMM	DATE: 08/22/2024	ELEMENTARY WIRING DIAGRAM AWS US ISOLATION VALVE (AWSS7)
APPROVED BY: CMH	DATE: 08/22/2024	TECHNOLOGY: HYDRO / DRAWING CATEGORY: SCHEMATICS
SCALE: NONE	PROJECT NO.: ARL-007	DWG: EE-DK-007 / REV: 0

AWSS8
DS PASSAGE AWS ISOLATION VALVE
24" BUTTERFLY VALVE

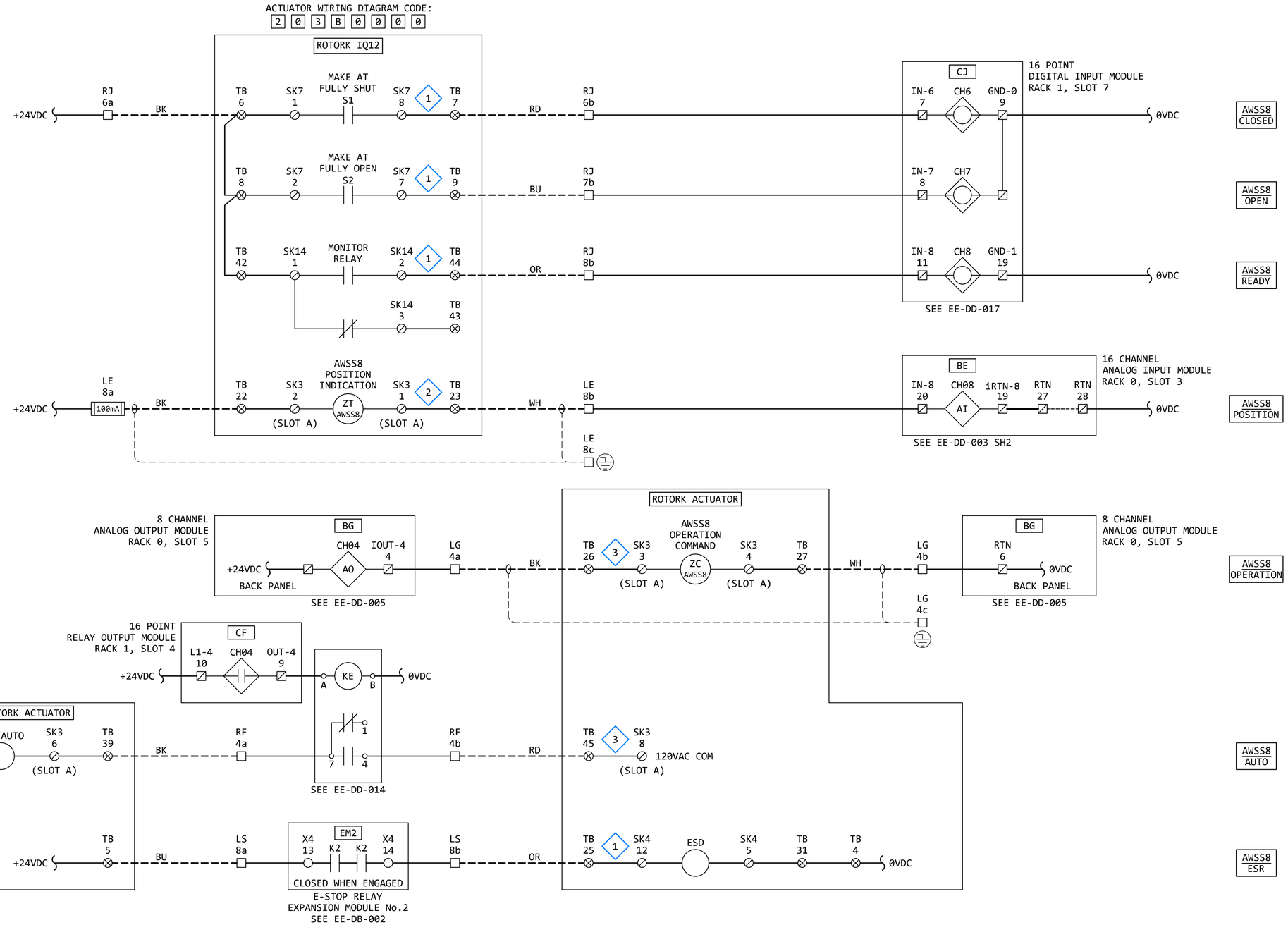

GENERAL NOTES:

1. THE DESIGN SHOWN IS BASED ON ROTORK PUBLICATION PUB002-041-00, ISSUE 02/23. SEE KEYED NOTES FOR FURTHER DETAILS.
2. TERMINAL NUMBERS ARE SUBJECT TO CHANGE. REFER TO CIRCUIT DIAGRAMS SUPPLIED WITH EQUIPMENT.

KEYED NOTES:

1. ACTUATOR WIRING - BASIC: IQ ACTUATOR BASIC CIRCUIT DIAGRAM 100B0000 (PUB002-041-00, PAGE 12)
2. ACTUATOR WIRING - OPTIONAL: REQUIRES "VALVE POSITION - CPT" OPTION. (PUB002-041-00, PAGE 13)
3. ACTUATOR WIRING - OPTIONAL: REQUIRES "ANALOGUE POSITION CONTROL FOLOMATIC" OPTION. (PUB002-041-00, PAGE 13)

REVISION

REV	DATE	DR	CK	AP	DESCRIPTION
0	03/28/2025	SAM	CMM	CMH	ISSUED FOR CONSTRUCTION

"Engineering with Distinction"
ELECTRICAL CONSULTANTS, INC.

THIS DRAWING IS THE PROPERTY OF ELECTRICAL CONSULTANTS, INC. AND IS TO BE USED ONLY FOR THE SPECIFIC PROJECT IDENTIFIED ON THE DRAWING. NO REVISIONS SHALL BE MADE WITHOUT THE EXPRESSED WRITTEN CONSENT OF ELECTRICAL CONSULTANTS, INC.

DRAWN BY: SAM	DATE: 08/22/2024	WOODLAND PULP, LLC WOODLAND FISH LIFT PASSAGE
CHECKED BY: CMM	DATE: 08/22/2024	ELEMENTARY WIRING DIAGRAM DS PASSAGE AWS ISOLATION VALVE (AWSS8)
APPROVED BY: CMH	DATE: 08/22/2024	TECHNOLOGY: HYDRO / DRAWING CATEGORY: SCHEMATICS
SCALE: NONE	PROJECT NO.: ARL-007	DWG: EE-DK-008 / REV: 0

AWSS9
AWS DS ISOLATION VALVE
24" BUTTERFLY VALVE

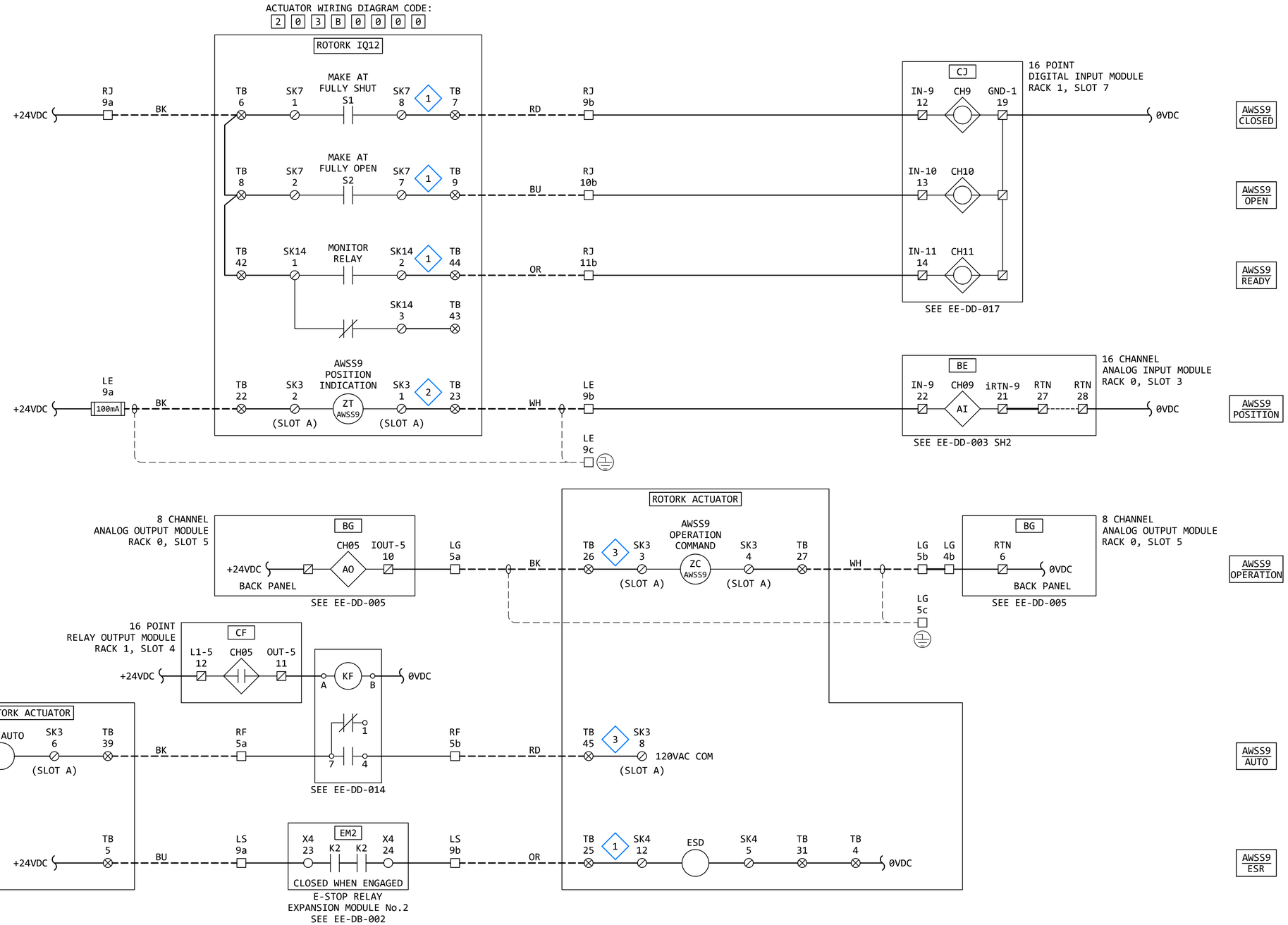

GENERAL NOTES:

1. THE DESIGN SHOWN IS BASED ON ROTORK PUBLICATION PUB002-041-00, ISSUE 02/23. SEE KEYED NOTES FOR FURTHER DETAILS.
2. TERMINAL NUMBERS ARE SUBJECT TO CHANGE. REFER TO CIRCUIT DIAGRAMS SUPPLIED WITH EQUIPMENT.

KEYED NOTES:

1. ACTUATOR WIRING - BASIC: IQ ACTUATOR BASIC CIRCUIT DIAGRAM 100B0000 (PUB002-041-00, PAGE 12)
2. ACTUATOR WIRING - OPTIONAL: REQUIRES "VALVE POSITION - CPT" OPTION. (PUB002-041-00, PAGE 13)
3. ACTUATOR WIRING - OPTIONAL: REQUIRES "ANALOGUE POSITION CONTROL FOLOMATIC" OPTION. (PUB002-041-00, PAGE 13)

REVISION

REV	DATE	DR	CK	AP	DESCRIPTION
0	03/28/2025	SAM	CMM	CMH	ISSUED FOR CONSTRUCTION

ELECTRICAL CONSULTANTS, INC.
"Engineering with Distinction"

THIS DRAWING IS THE PROPERTY OF ELECTRICAL CONSULTANTS, INC. AND IS TO BE USED ONLY FOR THE SPECIFIC PROJECT IDENTIFIED ON THE DRAWING. NO REVISIONS SHALL BE MADE WITHOUT THE EXPRESSED WRITTEN CONSENT OF ELECTRICAL CONSULTANTS, INC.

DRAWN BY: SAM	DATE: 08/22/2024	WOODLAND PULP, LLC WOODLAND FISH LIFT PASSAGE
CHECKED BY: CMM	DATE: 08/22/2024	ELEMENTARY WIRING DIAGRAM AWS DS ISOLATION VALVE (AWSS9)
APPROVED BY: CMH	DATE: 08/22/2024	TECHNOLOGY: HYDRO / DRAWING CATEGORY: SCHEMATICS
SCALE: NONE	PROJECT NO.: ARL-007	DWG: EE-DK-009 / REV: 0

IG10
EXIT FLUME DS BYPASS ISOLATION GATE
6'W x 4'H (24 FT^2) GATE
MAX DELTA: 11.0'

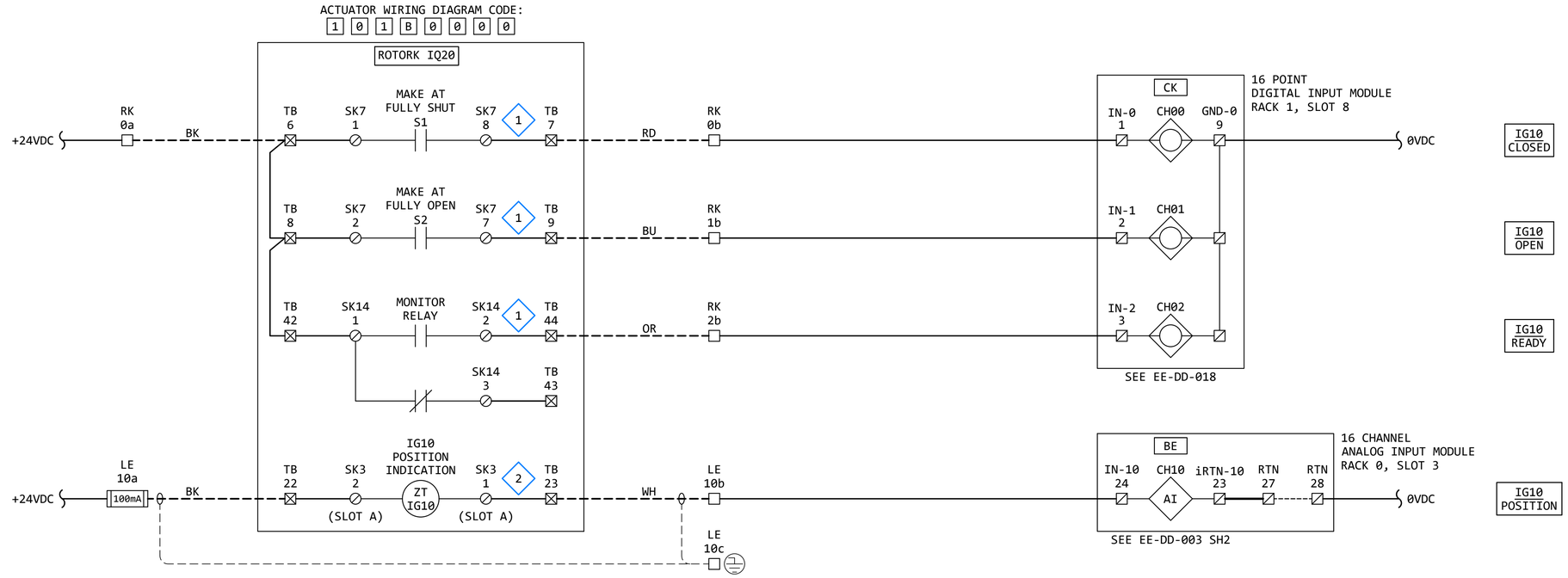

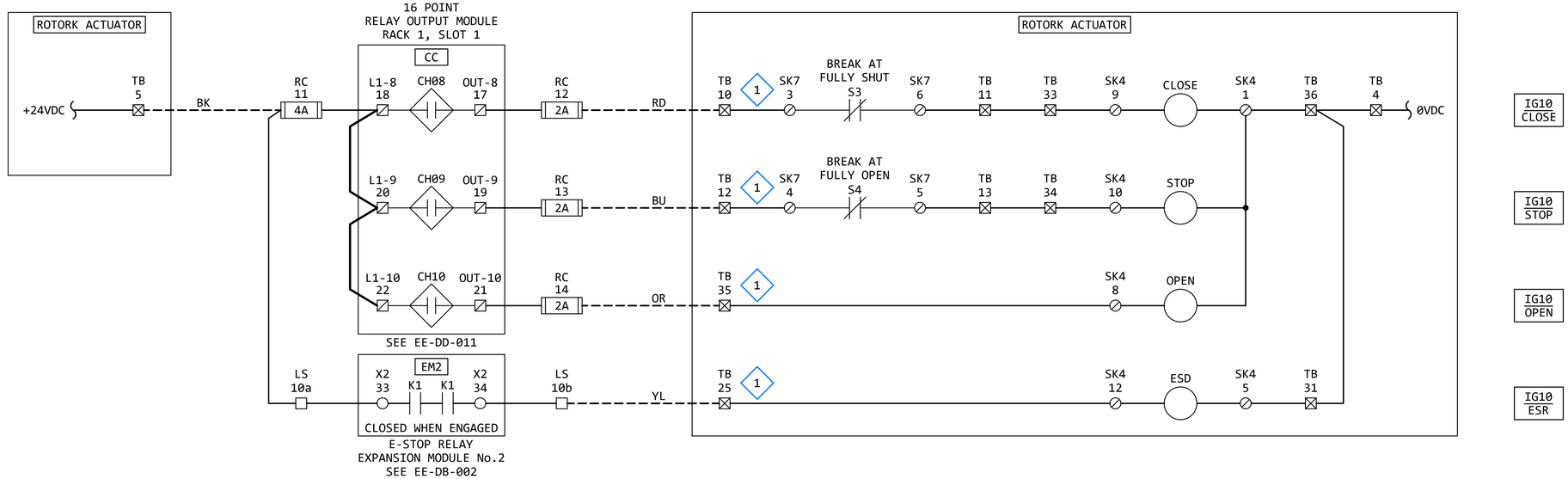

GENERAL NOTES:

1. THE DESIGN SHOWN IS BASED ON ROTORK PUBLICATION PUB002-041-00, ISSUE 02/23. SEE KEYED NOTES FOR FURTHER DETAILS.
2. TERMINAL NUMBERS ARE SUBJECT TO CHANGE. REFER TO CIRCUIT DIAGRAMS SUPPLIED WITH EQUIPMENT.

KEYED NOTES:

1. ACTUATOR WIRING - BASIC: IQ ACTUATOR BASIC CIRCUIT DIAGRAM 100B0000 (PUB002-041-00, PAGE 12)
2. ACTUATOR WIRING - OPTIONAL: REQUIRES "VALVE POSITION - CPT" OPTION. (PUB002-041-00, PAGE 13)

REVISION

REV	DATE	DR	CK	AP	DESCRIPTION
0	03/28/2025	SAM	CMM	CMH	ISSUED FOR CONSTRUCTION

"Engineering with Distinction"
ELECTRICAL CONSULTANTS, INC.

THIS DRAWING IS THE PROPERTY OF ELECTRICAL CONSULTANTS, INC. AND IS TO BE USED ONLY FOR THE SPECIFIC PROJECT IDENTIFIED ON THE DRAWING. NO REVISIONS SHALL BE MADE WITHOUT THE EXPRESSED WRITTEN CONSENT OF ELECTRICAL CONSULTANTS, INC.

DRAWN BY: SAM	DATE: 08/22/2024	WOODLAND PULP, LLC WOODLAND FISH LIFT PASSAGE
CHECKED BY: CMM	DATE: 08/22/2024	ELEMENTARY WIRING DIAGRAM EXIT FLUME DS BYPASS ISOLATION GATE (IG10)
APPROVED BY: CMH	DATE: 08/22/2024	TECHNOLOGY: HYDRO / DRAWING CATEGORY: SCHEMATICS
SCALE: NONE	PROJECT NO.: ARL-007	DWG: EE-DK-010 / REV: 0

OWG11
P&W ENTRANCE OVERSHOT WEIR GATE
2'W x 6'H GATE

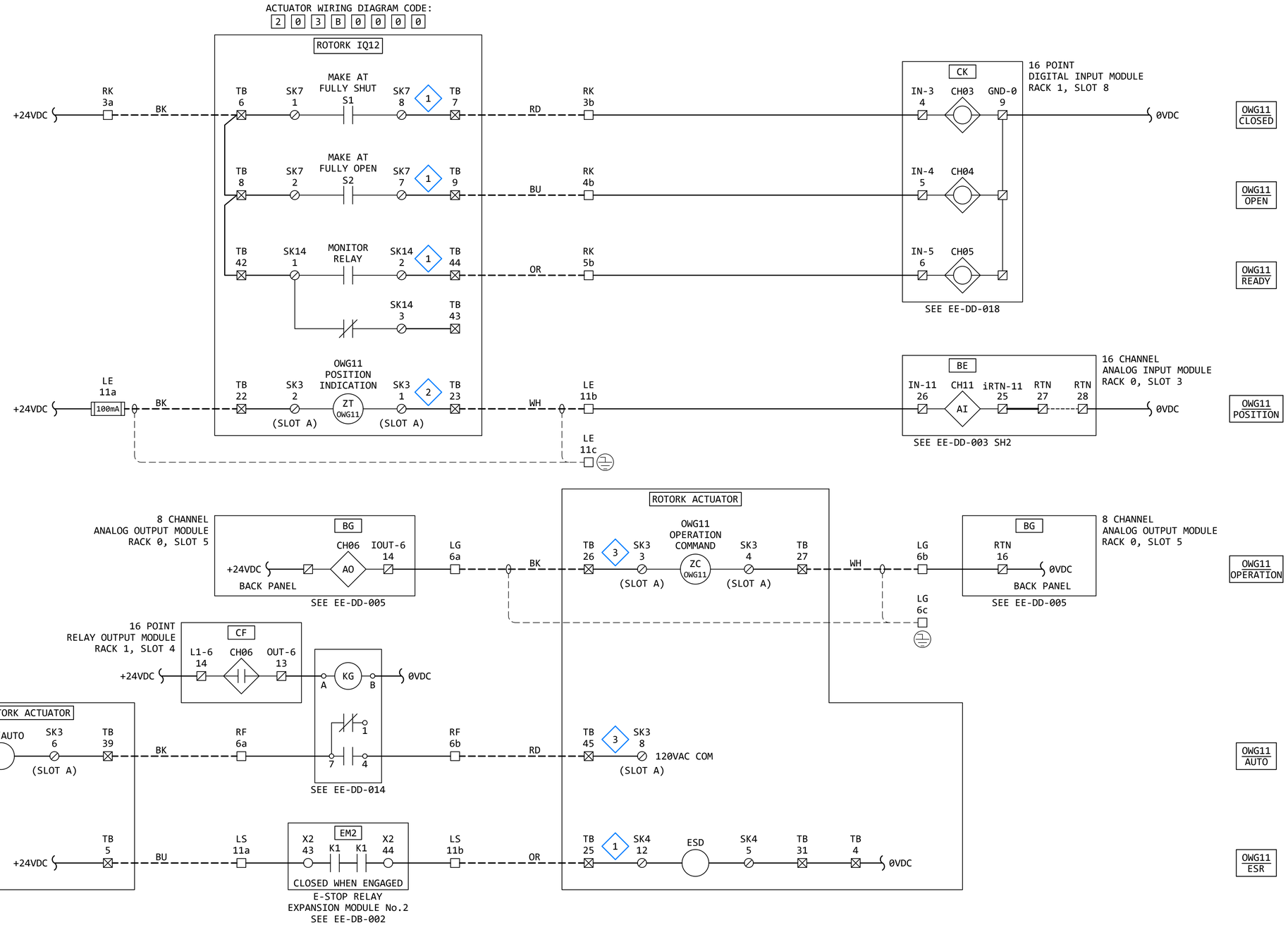

GENERAL NOTES:

1. THE DESIGN SHOWN IS BASED ON ROTORK PUBLICATION PUB002-041-00, ISSUE 02/23. SEE KEYED NOTES FOR FURTHER DETAILS.
2. TERMINAL NUMBERS ARE SUBJECT TO CHANGE. REFER TO CIRCUIT DIAGRAMS SUPPLIED WITH EQUIPMENT.

KEYED NOTES:

1. ACTUATOR WIRING - BASIC: IQ ACTUATOR BASIC CIRCUIT DIAGRAM 100B0000 (PUB002-041-00, PAGE 12)
2. ACTUATOR WIRING - OPTIONAL: REQUIRES "VALVE POSITION - CPT" OPTION. (PUB002-041-00, PAGE 13)
3. ACTUATOR WIRING - OPTIONAL: REQUIRES "ANALOGUE POSITION CONTROL FOLOMATIC" OPTION. (PUB002-041-00, PAGE 13)

REVISION

REV	DATE	DR	CK	AP	DESCRIPTION
0	03/28/2025	SAM	CMM	CMH	ISSUED FOR CONSTRUCTION

EGI ELECTRICAL CONSULTANTS, INC.
"Engineering with Distinction"

THIS DRAWING IS THE PROPERTY OF ELECTRICAL CONSULTANTS, INC. AND IS TO BE USED ONLY FOR THE SPECIFIC PROJECT IDENTIFIED ON THE DRAWING. NO REVISIONS SHALL BE MADE WITHOUT THE EXPRESSED WRITTEN CONSENT OF ELECTRICAL CONSULTANTS, INC.

DRAWN BY: SAM	DATE: 08/22/2024	WOODLAND PULP, LLC WOODLAND FISH LIFT PASSAGE
CHECKED BY: CMM	DATE: 08/22/2024	ELEMENTARY WIRING DIAGRAM P&W ENTRANCE OVERSHOT WEIR GATE (OWG11)
APPROVED BY: CMH	DATE: 08/22/2024	TECHNOLOGY: HYDRO / DRAWING CATEGORY: SCHEMATICS
SCALE: NONE	PROJECT NO.: ARL-007	DWG: EE-DK-011 / REV: 0

IG12
P&W ENTRANCE ISOLATION GATE
2'W x 9'H (18 FT^2) GATE
MAX DELTA: 30.0"

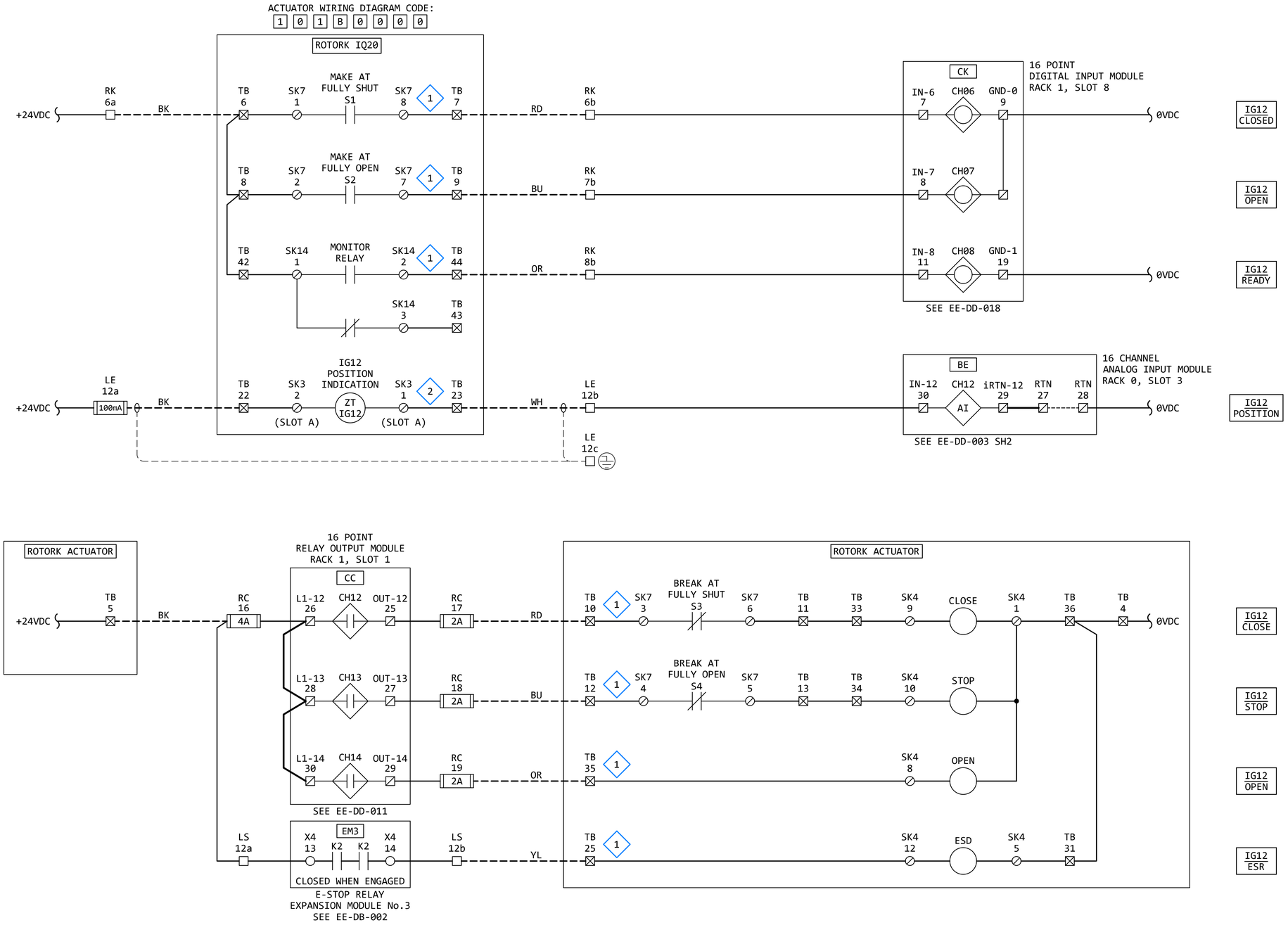

GENERAL NOTES:

1. THE DESIGN SHOWN IS BASED ON ROTORK PUBLICATION PUB002-041-00, ISSUE 02/23. SEE KEYED NOTES FOR FURTHER DETAILS.
2. TERMINAL NUMBERS ARE SUBJECT TO CHANGE. REFER TO CIRCUIT DIAGRAMS SUPPLIED WITH EQUIPMENT.

KEYED NOTES:

1. ACTUATOR WIRING - BASIC: IQ ACTUATOR BASIC CIRCUIT DIAGRAM 100B0000 (PUB002-041-00, PAGE 12)
2. ACTUATOR WIRING - OPTIONAL: REQUIRES "VALVE POSITION - CPT" OPTION. (PUB002-041-00, PAGE 13)

REVISION

REV	DATE	DR	CK	AP	DESCRIPTION
0	03/28/2025	SAM	CMM	CMH	ISSUED FOR CONSTRUCTION

"Engineering with Distinction"
ELECTRICAL CONSULTANTS, INC.

THIS DRAWING IS THE PROPERTY OF ELECTRICAL CONSULTANTS, INC. AND IS TO BE USED ONLY FOR THE SPECIFIC PROJECT IDENTIFIED ON THE DRAWING. NO REVISIONS SHALL BE MADE WITHOUT THE EXPRESSED WRITTEN CONSENT OF ELECTRICAL CONSULTANTS, INC.

DRAWN BY: SAM	DATE: 08/22/2024	WOODLAND PULP, LLC WOODLAND FISH LIFT PASSAGE
CHECKED BY: CMM	DATE: 08/22/2024	ELEMENTARY WIRING DIAGRAM P&W ENTRANCE ISOLATION GATE (IG12)
APPROVED BY: CMH	DATE: 08/22/2024	TECHNOLOGY: HYDRO / DRAWING CATEGORY: SCHEMATICS
SCALE: NONE	PROJECT NO.: ARL-007	DWG: EE-DK-012 / REV: 0

OWG13
P&W EXIT OVERSHOT WEIR GATE
4'W x 8'H GATE

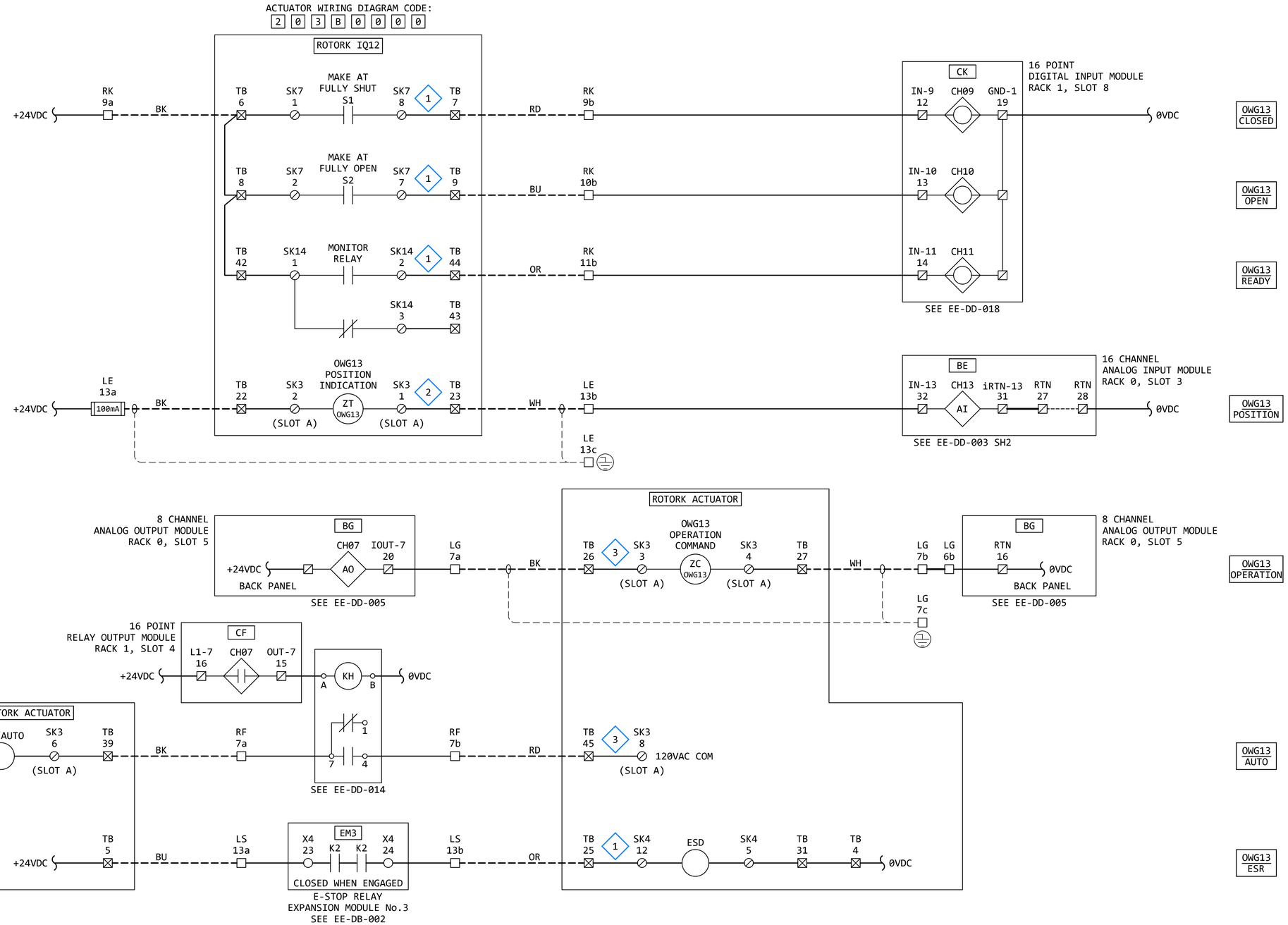

GENERAL NOTES:

1. THE DESIGN SHOWN IS BASED ON ROTORK PUBLICATION PUB002-041-00, ISSUE 02/23. SEE KEYED NOTES FOR FURTHER DETAILS.
2. TERMINAL NUMBERS ARE SUBJECT TO CHANGE. REFER TO CIRCUIT DIAGRAMS SUPPLIED WITH EQUIPMENT.

KEYED NOTES:

1. ACTUATOR WIRING - BASIC: IQ ACTUATOR BASIC CIRCUIT DIAGRAM 100B0000 (PUB002-041-00, PAGE 12)
2. ACTUATOR WIRING - OPTIONAL: REQUIRES "VALVE POSITION - CPT" OPTION. (PUB002-041-00, PAGE 13)
3. ACTUATOR WIRING - OPTIONAL: REQUIRES "ANALOGUE POSITION CONTROL FOLOMATIC" OPTION. (PUB002-041-00, PAGE 13)

REVISION

REV	DATE	DR	CK	AP	DESCRIPTION
0	03/28/2025	SAM	CMM	CMH	ISSUED FOR CONSTRUCTION

EGI ELECTRICAL CONSULTANTS, INC.
"Engineering with Distinction"

THIS DRAWING IS THE PROPERTY OF ELECTRICAL CONSULTANTS, INC. AND IS TO BE USED ONLY FOR THE SPECIFIC PROJECT IDENTIFIED ON THE DRAWING. NO REVISIONS SHALL BE MADE WITHOUT THE EXPRESSED WRITTEN CONSENT OF ELECTRICAL CONSULTANTS, INC.

DRAWN BY: SAM	DATE: 08/22/2024	WOODLAND PULP, LLC WOODLAND FISH LIFT PASSAGE
CHECKED BY: CMM	DATE: 08/22/2024	ELEMENTARY WIRING DIAGRAM P&W EXIT OVERSHOT WEIR GATE (OWG13)
APPROVED BY: CMH	DATE: 08/22/2024	TECHNOLOGY: HYDRO / DRAWING CATEGORY: SCHEMATICS
SCALE: NONE	PROJECT NO.: ARL-007	DWG: EE-DK-013 / REV: 0

DSG14
DS BYPASS KNIFE GATE VALVE
30" KNIFE GATE VALVE

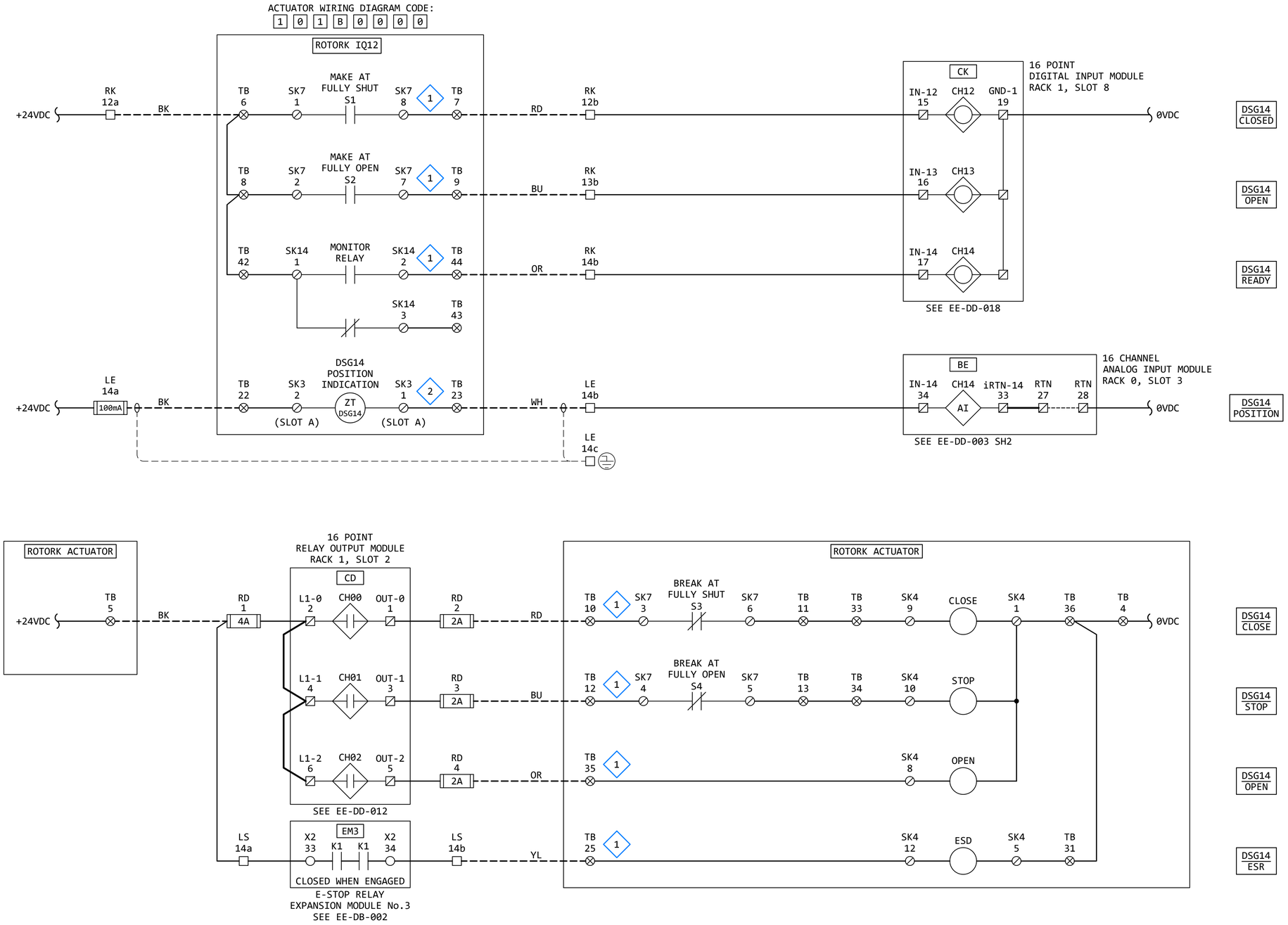

GENERAL NOTES:

1. THE DESIGN SHOWN IS BASED ON ROTORK PUBLICATION PUB002-041-00, ISSUE 02/23. SEE KEYED NOTES FOR FURTHER DETAILS.
2. TERMINAL NUMBERS ARE SUBJECT TO CHANGE. REFER TO CIRCUIT DIAGRAMS SUPPLIED WITH EQUIPMENT.

KEYED NOTES:

1. ACTUATOR WIRING - BASIC: IQ ACTUATOR BASIC CIRCUIT DIAGRAM 100B0000 (PUB002-041-00, PAGE 12)
2. ACTUATOR WIRING - OPTIONAL: REQUIRES "VALVE POSITION - CPT" OPTION. (PUB002-041-00, PAGE 13)

REVISION

REV	DATE	DR	CK	AP	DESCRIPTION
0	03/28/2025	SAM	CMM	CMH	ISSUED FOR CONSTRUCTION

"Engineering with Distinction"
ELECTRICAL CONSULTANTS, INC.

THIS DRAWING IS THE PROPERTY OF ELECTRICAL CONSULTANTS, INC. AND IS TO BE USED ONLY FOR THE SPECIFIC PROJECT IDENTIFIED ON THE DRAWING. NO REVISIONS SHALL BE MADE WITHOUT THE EXPRESSED WRITTEN CONSENT OF ELECTRICAL CONSULTANTS, INC.

DRAWN BY: SAM	DATE: 08/22/2024	WOODLAND PULP, LLC WOODLAND FISH LIFT PASSAGE
CHECKED BY: CMM	DATE: 08/22/2024	ELEMENTARY WIRING DIAGRAM DS BYPASS KNIFE GATE VALVE (DSG14)
APPROVED BY: CMH	DATE: 08/22/2024	TECHNOLOGY: HYDRO / DRAWING CATEGORY: SCHEMATICS
SCALE: NONE	PROJECT NO.: ARL-007	DWG: EE-DK-014 / REV: 0

DSG15
DS BYPASS KNIFE GATE VALVE
30" KNIFE GATE VALVE

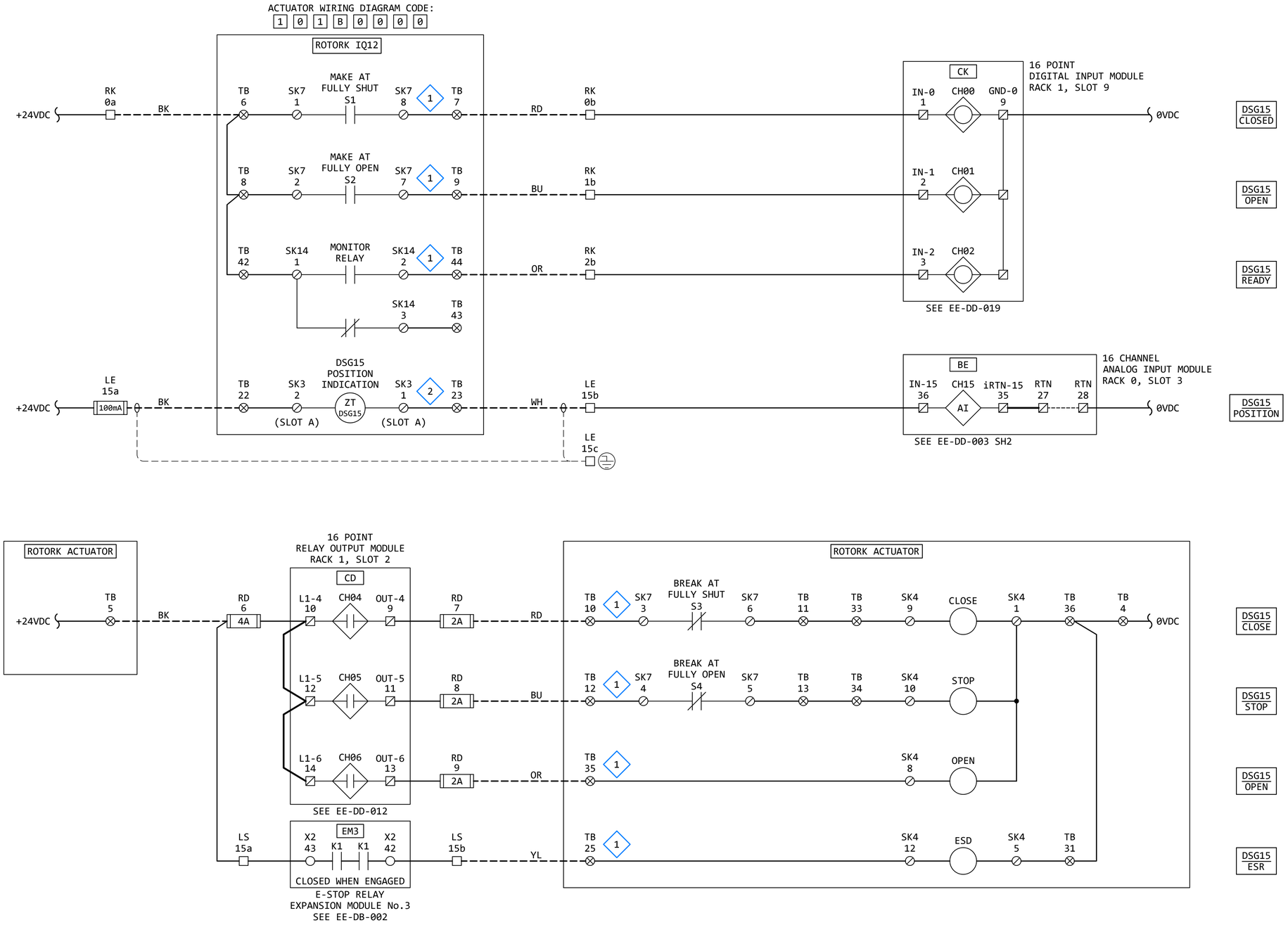

GENERAL NOTES:

1. THE DESIGN SHOWN IS BASED ON ROTORK PUBLICATION PUB002-041-00, ISSUE 02/23. SEE KEYED NOTES FOR FURTHER DETAILS.
2. TERMINAL NUMBERS ARE SUBJECT TO CHANGE. REFER TO CIRCUIT DIAGRAMS SUPPLIED WITH EQUIPMENT.

KEYED NOTES:

1. ACTUATOR WIRING - BASIC: IQ ACTUATOR BASIC CIRCUIT DIAGRAM 100B0000 (PUB002-041-00, PAGE 12)
2. ACTUATOR WIRING - OPTIONAL: REQUIRES "VALVE POSITION - CPT" OPTION. (PUB002-041-00, PAGE 13)

REVISION

REV	DATE	DR	CK	AP	DESCRIPTION
0	03/28/2025	SAM	CMM	CMH	ISSUED FOR CONSTRUCTION

"Engineering with Distinction"
ELECTRICAL CONSULTANTS, INC.

THIS DRAWING IS THE PROPERTY OF ELECTRICAL CONSULTANTS, INC. AND IS TO BE USED ONLY FOR THE SPECIFIC PROJECT IDENTIFIED ON THE DRAWING. NO REVISIONS SHALL BE MADE WITHOUT THE EXPRESSED WRITTEN CONSENT OF ELECTRICAL CONSULTANTS, INC.

DRAWN BY: SAM	DATE: 08/22/2024	WOODLAND PULP, LLC WOODLAND FISH LIFT PASSAGE
CHECKED BY: CMM	DATE: 08/22/2024	ELEMENTARY WIRING DIAGRAM DS BYPASS KNIFE GATE VALVE (DSG15)
APPROVED BY: CMH	DATE: 08/22/2024	TECHNOLOGY: HYDRO / DRAWING CATEGORY: SCHEMATICS
SCALE: NONE	PROJECT NO.: ARL-007	DWG: EE-DK-015 / REV: 0

IG16
DS BYPASS ISOLATION GATE
7'W x 7'H (49 FT^2) GATE
MAX DELTA: 30"

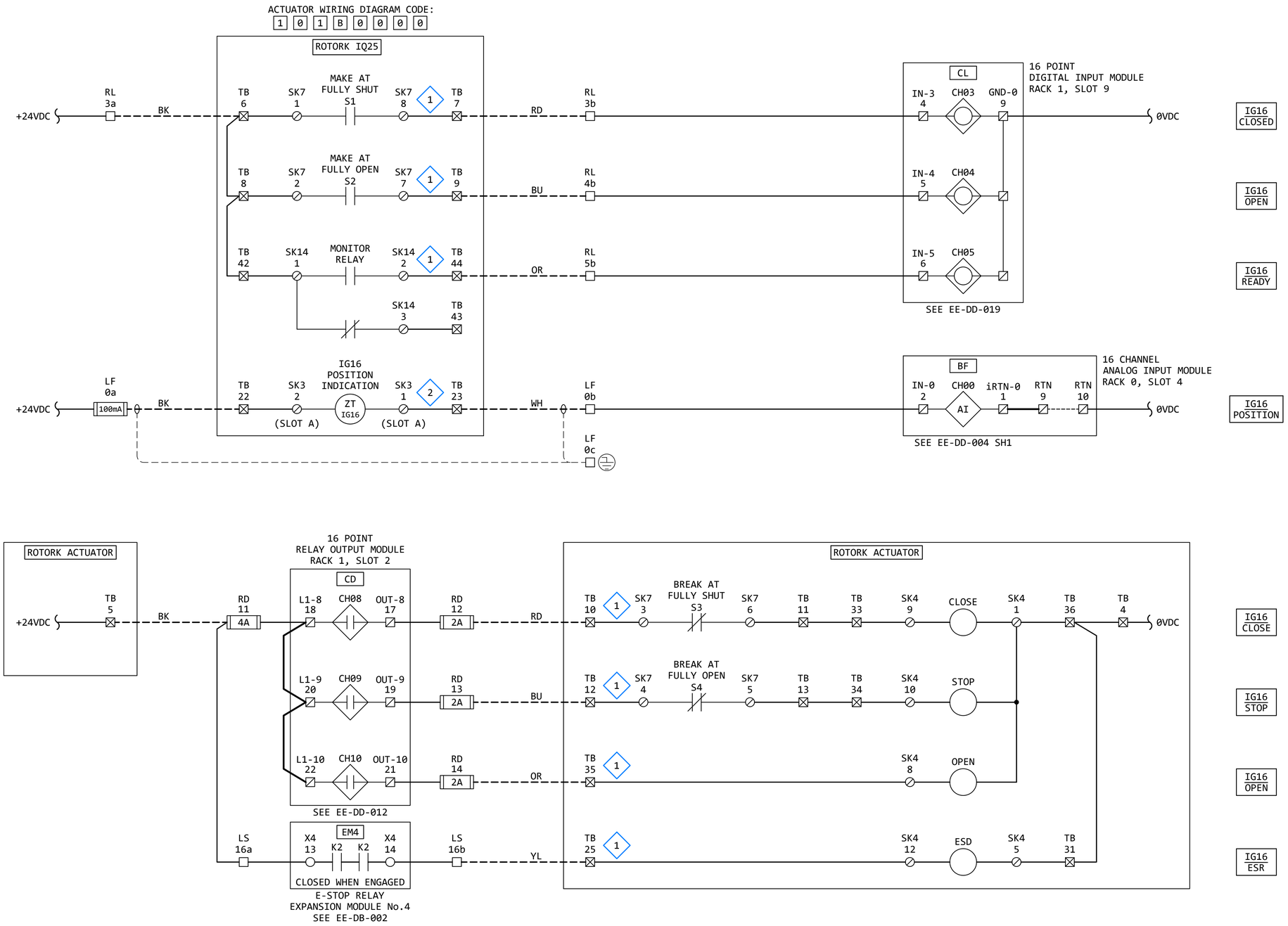

GENERAL NOTES:

1. THE DESIGN SHOWN IS BASED ON ROTORK PUBLICATION PUB002-041-00, ISSUE 02/23. SEE KEYED NOTES FOR FURTHER DETAILS.
2. TERMINAL NUMBERS ARE SUBJECT TO CHANGE. REFER TO CIRCUIT DIAGRAMS SUPPLIED WITH EQUIPMENT.

KEYED NOTES:

1. ACTUATOR WIRING - BASIC: IQ ACTUATOR BASIC CIRCUIT DIAGRAM 100B0000 (PUB002-041-00, PAGE 12)
2. ACTUATOR WIRING - OPTIONAL: REQUIRES "VALVE POSITION - CPT" OPTION. (PUB002-041-00, PAGE 13)

REVISION

REV	DATE	DR	CK	AP	DESCRIPTION
0	03/28/2025	SAM	CMM	CMH	ISSUED FOR CONSTRUCTION

"Engineering with Distinction"
ELECTRICAL CONSULTANTS, INC.

THIS DRAWING IS THE PROPERTY OF ELECTRICAL CONSULTANTS, INC. AND IS TO BE USED ONLY FOR THE SPECIFIC PROJECT IDENTIFIED ON THE DRAWING. NO REVISIONS SHALL BE MADE WITHOUT THE EXPRESSED WRITTEN CONSENT OF ELECTRICAL CONSULTANTS, INC.

DRAWN BY: SAM	DATE: 08/22/2024	WOODLAND PULP, LLC WOODLAND FISH LIFT PASSAGE
CHECKED BY: CMM	DATE: 08/22/2024	ELEMENTARY WIRING DIAGRAM DS BYPASS ISOLATION GATE (IG16)
APPROVED BY: CMH	DATE: 08/22/2024	TECHNOLOGY: HYDRO / DRAWING CATEGORY: SCHEMATICS
SCALE: NONE	PROJECT NO.: ARL-007	DWG: EE-DK-016 / REV: 0

IG17
P&W EXIT ISOLATION GATE
2'W x 6.75'H (13.5 FT^2) GATE
MAX DELTA: 30"

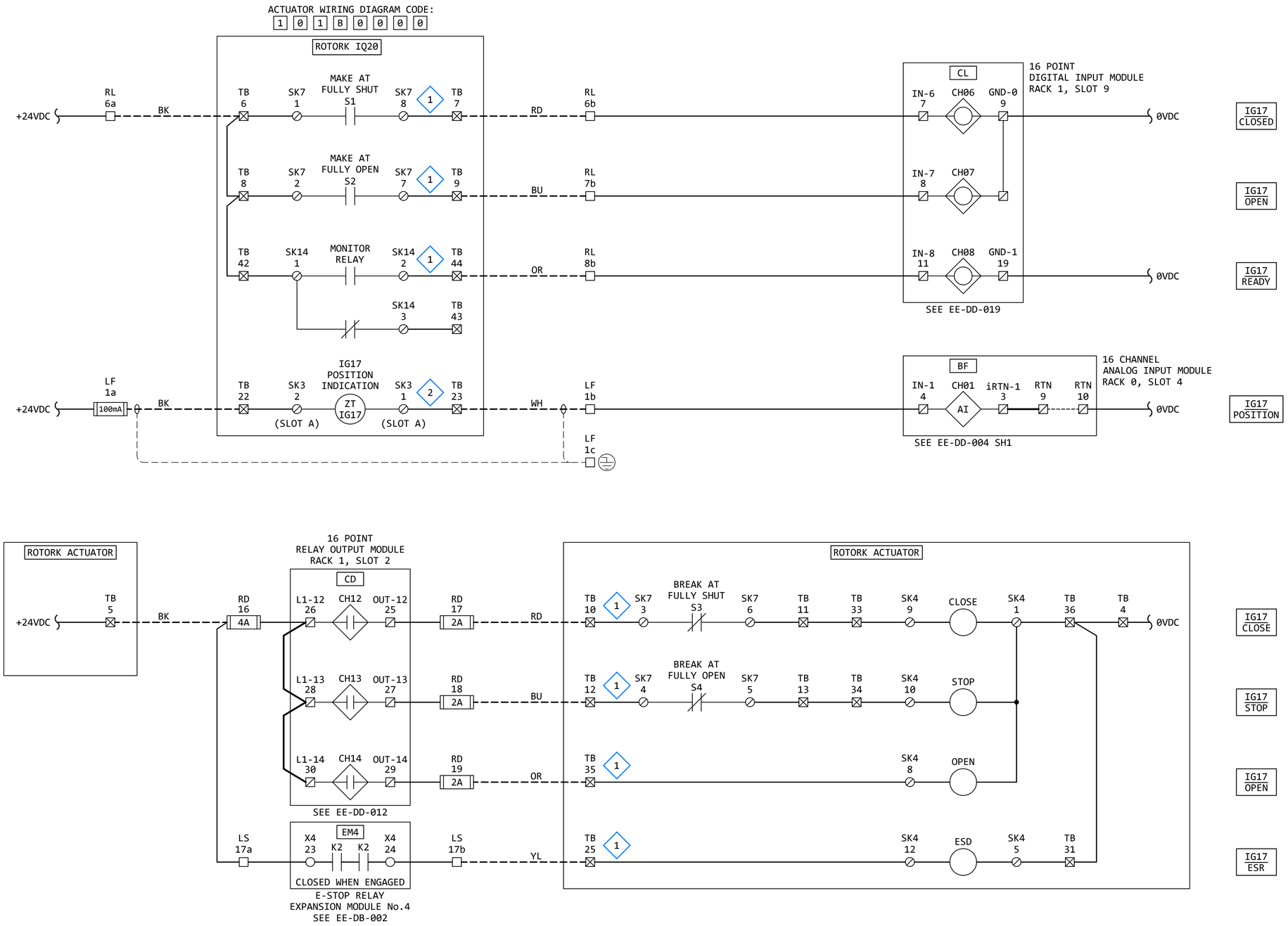

GENERAL NOTES:

1. THE DESIGN SHOWN IS BASED ON ROTORK PUBLICATION PUB002-041-00, ISSUE 02/23. SEE KEYED NOTES FOR FURTHER DETAILS.
2. TERMINAL NUMBERS ARE SUBJECT TO CHANGE. REFER TO CIRCUIT DIAGRAMS SUPPLIED WITH EQUIPMENT.

KEYED NOTES:

1. ACTUATOR WIRING - BASIC: IQ ACTUATOR BASIC CIRCUIT DIAGRAM 100B0000 (PUB002-041-00, PAGE 12)
2. ACTUATOR WIRING - OPTIONAL: REQUIRES "VALVE POSITION - CPT" OPTION. (PUB002-041-00, PAGE 13)

REVISION

REV	DATE	DR	CK	AP	DESCRIPTION
0	03/28/2025	SAM	CMM	CMH	ISSUED FOR CONSTRUCTION

"Engineering with Distinction"
ELECTRICAL CONSULTANTS, INC.

THIS DRAWING IS THE PROPERTY OF ELECTRICAL CONSULTANTS, INC. AND IS TO BE USED ONLY FOR THE SPECIFIC PROJECT IDENTIFIED ON THE DRAWING. NO REVISIONS SHALL BE MADE WITHOUT THE EXPRESSED WRITTEN CONSENT OF ELECTRICAL CONSULTANTS, INC.

DRAWN BY: SAM	DATE: 08/22/2024	WOODLAND PULP, LLC WOODLAND FISH LIFT PASSAGE
CHECKED BY: CMM	DATE: 08/22/2024	ELEMENTARY WIRING DIAGRAM P&W EXIT ISOLATION GATE (IG17)
APPROVED BY: CMH	DATE: 08/22/2024	TECHNOLOGY: HYDRO DRAWING CATEGORY: SCHEMATICS
SCALE: NONE	PROJECT NO.: ARL-007	DWG: EE-DK-017 REV: 0

TG18
TRAP GATE
V-GATE

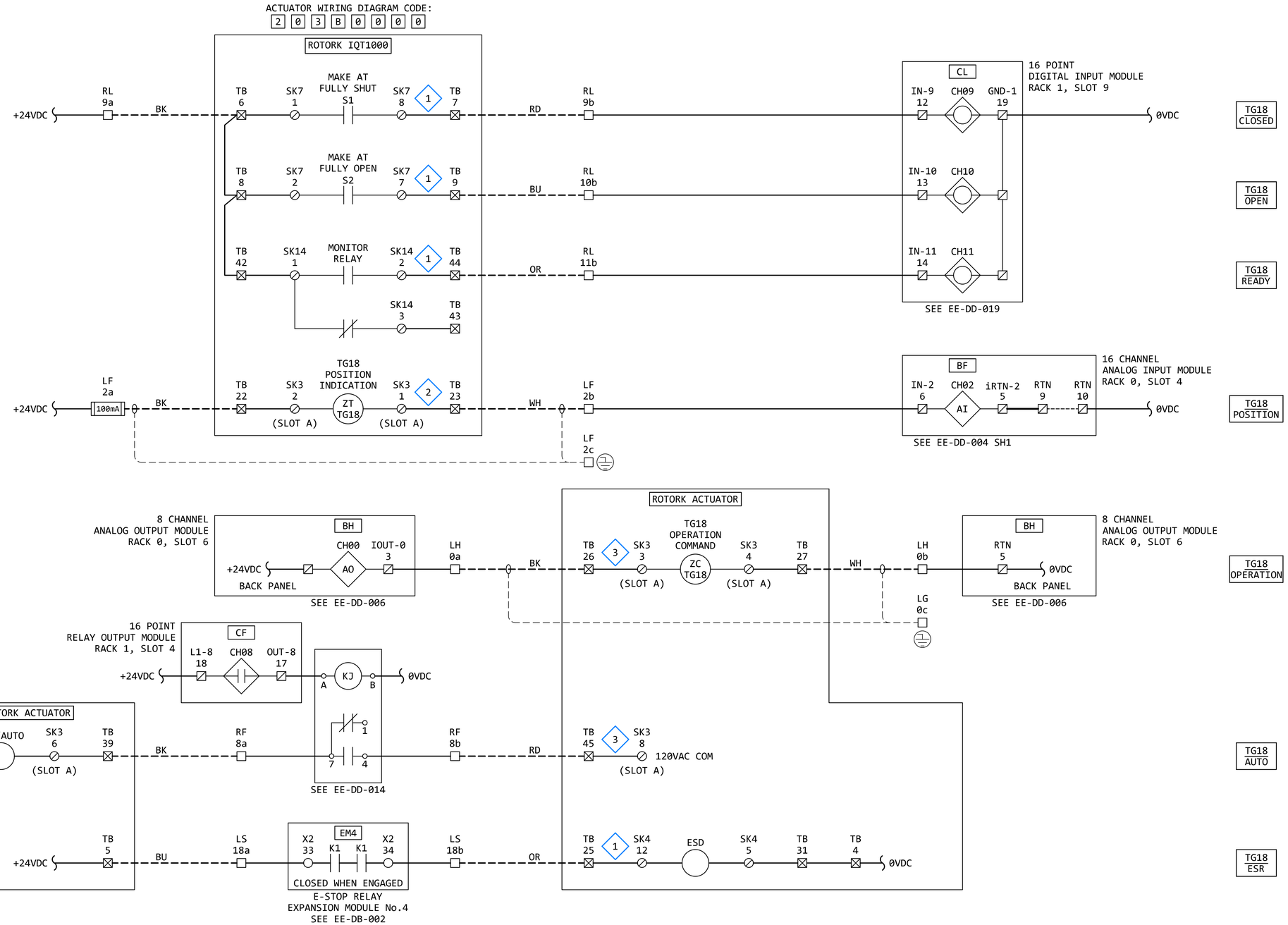

GENERAL NOTES:

1. THE DESIGN SHOWN IS BASED ON ROTORK PUBLICATION PUB002-041-00, ISSUE 02/23. SEE KEYED NOTES FOR FURTHER DETAILS.
2. TERMINAL NUMBERS ARE SUBJECT TO CHANGE. REFER TO CIRCUIT DIAGRAMS SUPPLIED WITH EQUIPMENT.

KEYED NOTES:

1. ACTUATOR WIRING - BASIC: IQ ACTUATOR BASIC CIRCUIT DIAGRAM 100B0000 (PUB002-041-00, PAGE 12)
2. ACTUATOR WIRING - OPTIONAL: REQUIRES "VALVE POSITION - CPT" OPTION. (PUB002-041-00, PAGE 13)
3. ACTUATOR WIRING - OPTIONAL: REQUIRES "ANALOGUE POSITION CONTROL FOLOMATIC" OPTION. (PUB002-041-00, PAGE 13)

REVISION

REV	DATE	DR	CK	AP	DESCRIPTION
0	03/28/2025	SAM	CMM	CMH	ISSUED FOR CONSTRUCTION

EGI ELECTRICAL CONSULTANTS, INC.
"Engineering with Distinction"

THIS DRAWING IS THE PROPERTY OF ELECTRICAL CONSULTANTS, INC. AND IS TO BE USED ONLY FOR THE SPECIFIC PROJECT IDENTIFIED ON THE DRAWING. NO REVISIONS SHALL BE MADE WITHOUT THE EXPRESSED WRITTEN CONSENT OF ELECTRICAL CONSULTANTS, INC.

DRAWN BY: SAM	DATE: 08/22/2024	WOODLAND PULP, LLC WOODLAND FISH LIFT PASSAGE
CHECKED BY: CMM	DATE: 08/22/2024	ELEMENTARY WIRING DIAGRAM TRAP GATE (TG18)
APPROVED BY: CMH	DATE: 08/22/2024	TECHNOLOGY: HYDRO / DRAWING CATEGORY: SCHEMATICS
SCALE: NONE	PROJECT NO.: ARL-007	DWG: EE-DK-018 / REV: 0

TG19
TRAP GATE
V-GATE

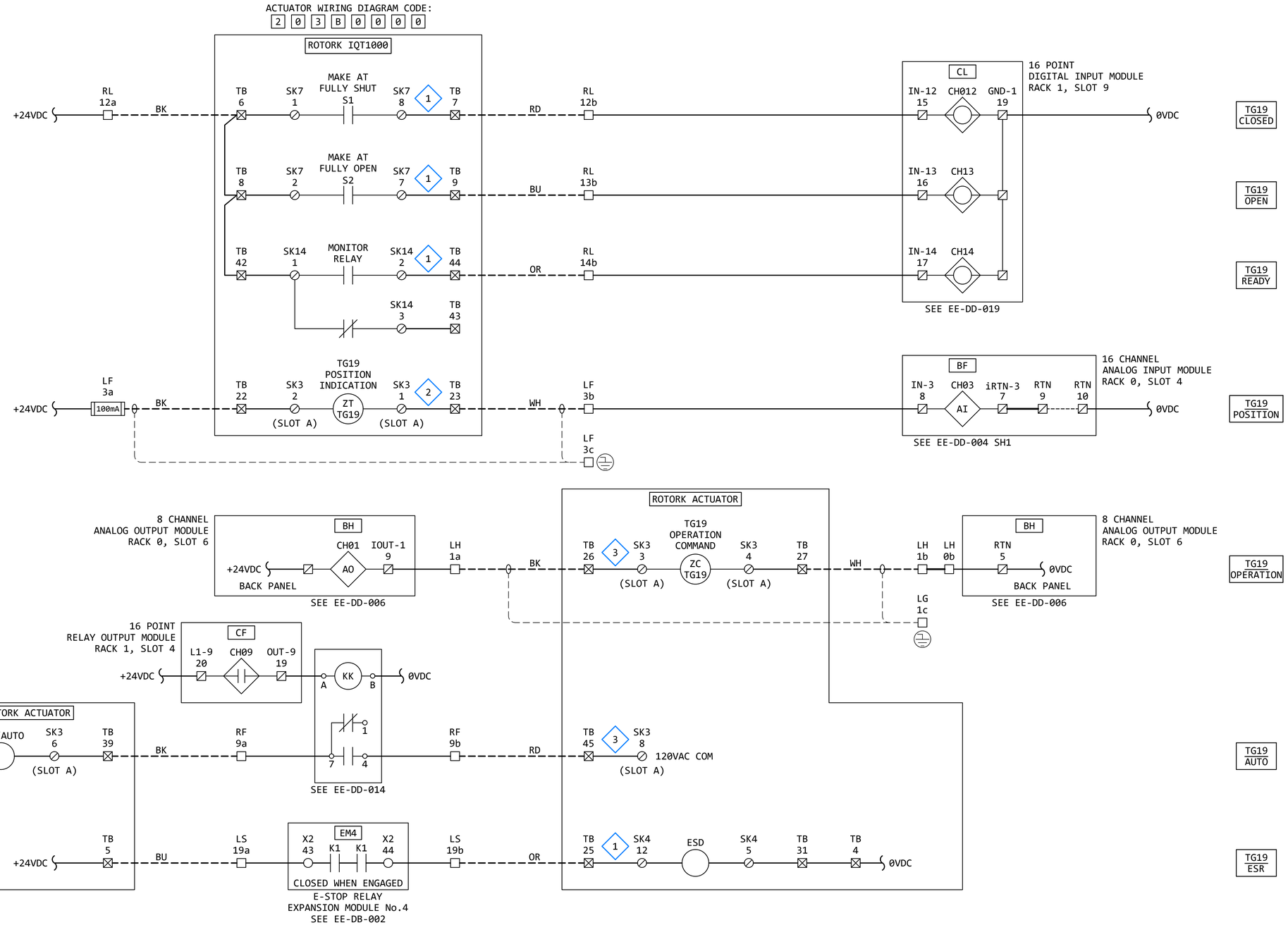

GENERAL NOTES:

1. THE DESIGN SHOWN IS BASED ON ROTORK PUBLICATION PUB002-041-00, ISSUE 02/23. SEE KEYED NOTES FOR FURTHER DETAILS.
2. TERMINAL NUMBERS ARE SUBJECT TO CHANGE. REFER TO CIRCUIT DIAGRAMS SUPPLIED WITH EQUIPMENT.

KEYED NOTES:

1. ACTUATOR WIRING - BASIC: IQ ACTUATOR BASIC CIRCUIT DIAGRAM 100B0000 (PUB002-041-00, PAGE 12)
2. ACTUATOR WIRING - OPTIONAL: REQUIRES "VALVE POSITION - CPT" OPTION. (PUB002-041-00, PAGE 13)
3. ACTUATOR WIRING - OPTIONAL: REQUIRES "ANALOGUE POSITION CONTROL FOLOMATIC" OPTION. (PUB002-041-00, PAGE 13)

REVISION

REV	DATE	DR	CK	AP	DESCRIPTION
0	03/28/2025	SAM	CMM	CMH	ISSUED FOR CONSTRUCTION

ELECTRICAL CONSULTANTS, INC.

THIS DRAWING IS THE PROPERTY OF ELECTRICAL CONSULTANTS, INC. AND IS TO BE USED ONLY FOR THE SPECIFIC PROJECT IDENTIFIED ON THE DRAWING. NO REVISIONS SHALL BE MADE WITHOUT THE EXPRESSED WRITTEN CONSENT OF ELECTRICAL CONSULTANTS, INC.

DRAWN BY: SAM	DATE: 08/22/2024	WOODLAND PULP, LLC WOODLAND FISH LIFT PASSAGE
CHECKED BY: CMM	DATE: 08/22/2024	ELEMENTARY WIRING DIAGRAM TRAP GATE (TG19)
APPROVED BY: CMH	DATE: 08/22/2024	TECHNOLOGY: HYDRO / DRAWING CATEGORY: SCHEMATICS
SCALE: NONE	PROJECT NO.: ARL-007	DWG: EE-DK-019 / REV: 0

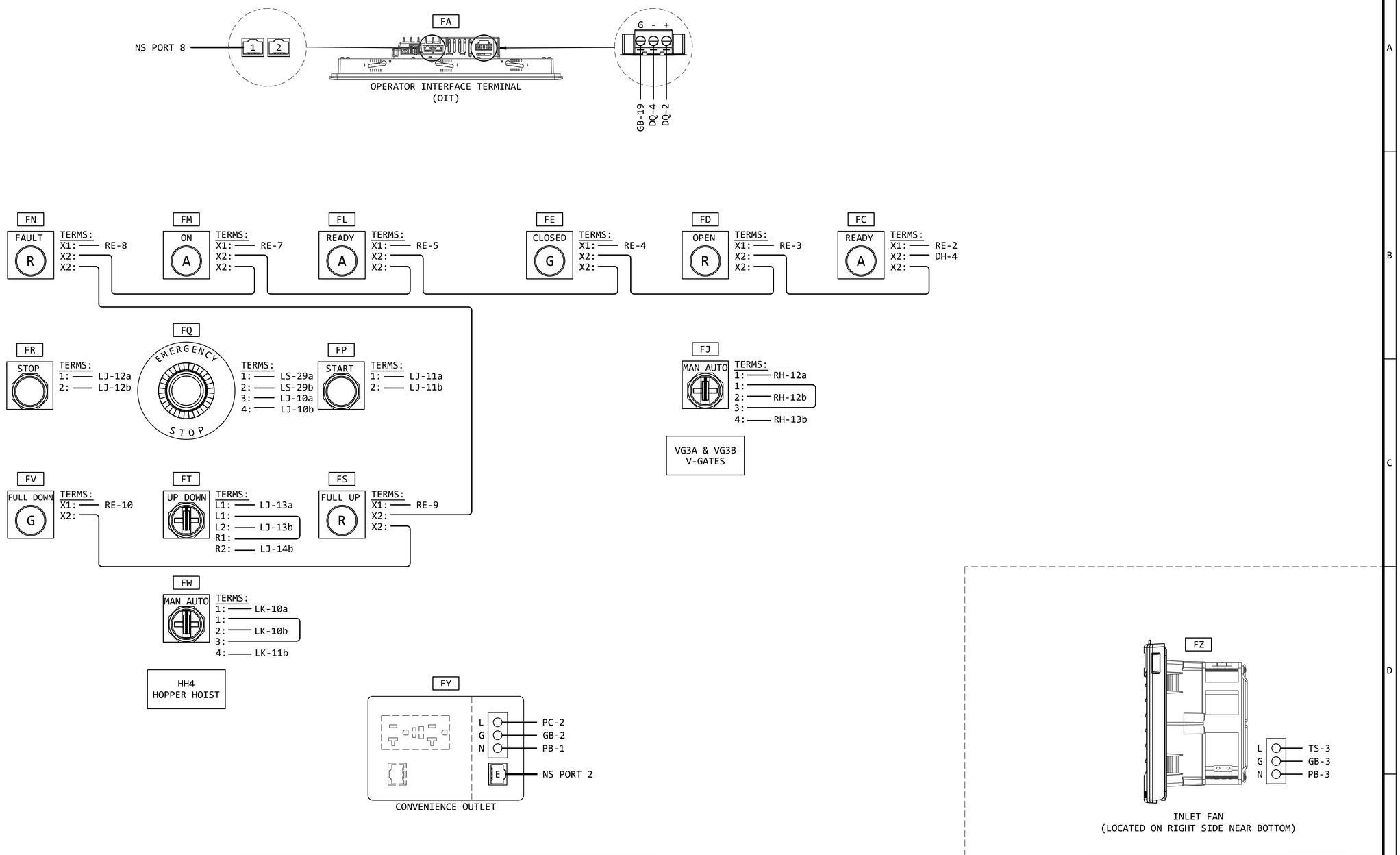

GENERAL NOTES:

1. ALL WIRING SHOWN ON THIS DRAWING IS FROM INSIDE OF THE DOOR, UNLESS NOTED OTHERWISE.

REVISION

REV	DATE	DR	CK	AP	DESCRIPTION
0	03/28/2025	SAM	CMM	CMH	ISSUED FOR CONSTRUCTION

"Engineering with Distinction"
ELECTRICAL CONSULTANTS, INC.

THIS DRAWING IS THE PROPERTY OF ELECTRICAL CONSULTANTS, INC. AND IS TO BE USED ONLY FOR THE SPECIFIC PROJECT IDENTIFIED ON THE DRAWING. NO REVISIONS SHALL BE MADE WITHOUT THE EXPRESSED WRITTEN CONSENT OF ELECTRICAL CONSULTANTS, INC.

DRAWN BY: SAM	DATE: 08/22/2024	WOODLAND PULP, LLC WOODLAND FISH LIFT PASSAGE
CHECKED BY: CMM	DATE: 08/22/2024	WIRING DIAGRAM - FRONT PANEL FISH LIFT CONTROL PANEL (FLCP)
APPROVED BY: CMH	DATE: 08/22/2024	TECHNOLOGY: HYDRO / DRAWING CATEGORY: WIRING DIAGRAMS
SCALE: NONE	PROJECT NO.: ARL-007	DWG: EE-ED-001 / REV: 0

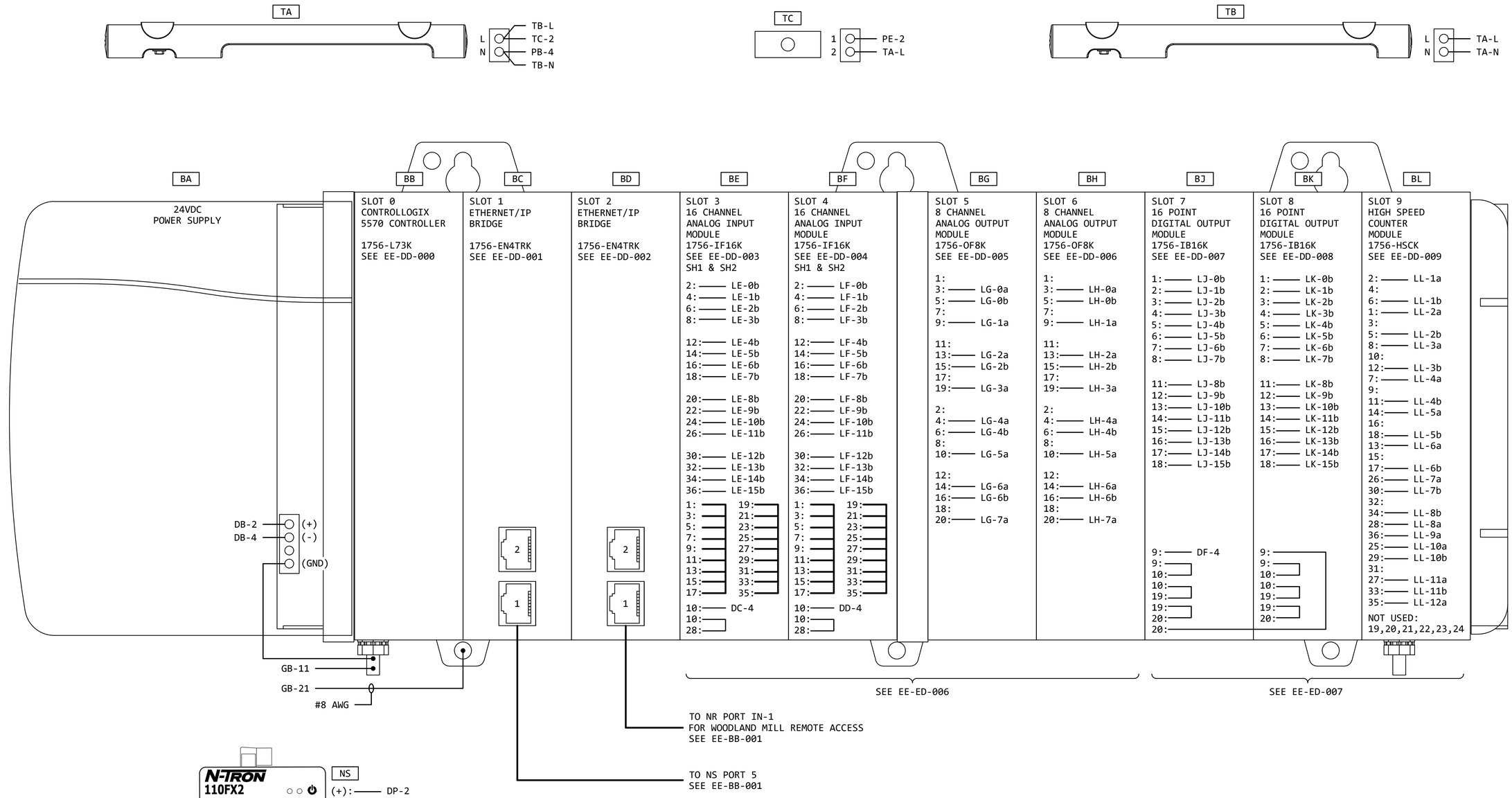

REVISION					
REV	DATE	DR	CK	AP	DESCRIPTION
0	03/28/2025	SAM	CMM	CMH	ISSUED FOR CONSTRUCTION

"Engineering with Distinction"
ELECTRICAL CONSULTANTS, INC.

THIS DRAWING IS THE PROPERTY OF ELECTRICAL CONSULTANTS, INC. AND IS TO BE USED ONLY FOR THE SPECIFIC PROJECT IDENTIFIED ON THE DRAWING. NO REVISIONS SHALL BE MADE WITHOUT THE EXPRESSED WRITTEN CONSENT OF ELECTRICAL CONSULTANTS, INC.

DRAWN BY: SAM	DATE: 08/22/2024	WOODLAND PULP, LLC WOODLAND FISH LIFT PASSAGE
CHECKED BY: CMM	DATE: 08/22/2024	WIRING DIAGRAM - INTERIOR - PLC RACK 0 FISH LIFT CONTROL PANEL (FLCP)
APPROVED BY: CMH	DATE: 08/22/2024	TECHNOLOGY: HYDRO / DRAWING CATEGORY: WIRING DIAGRAMS
SCALE: NONE	PROJECT NO.: ARL-007	DWG: EE-ED-002 / REV: 0

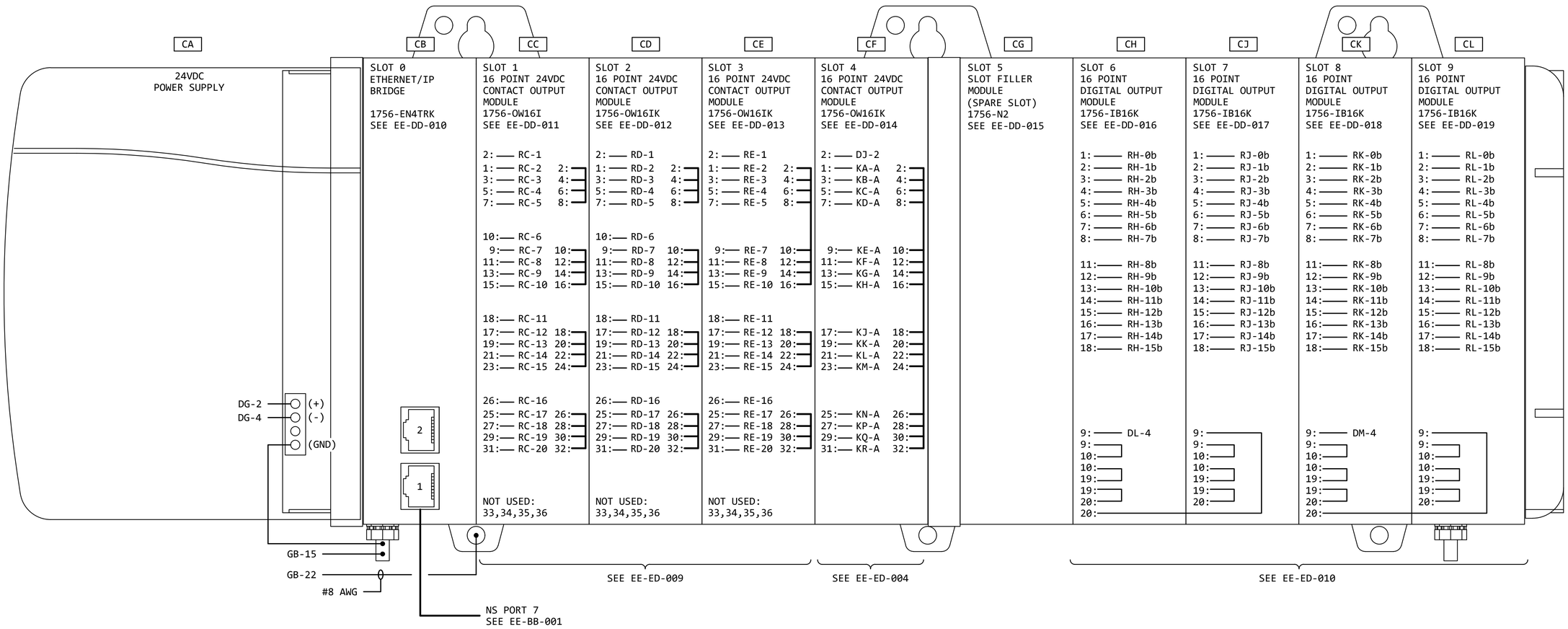

REVISION

REV	DATE	DR	CK	AP	DESCRIPTION
0	03/28/2025	SAM	CMM	CMH	ISSUED FOR CONSTRUCTION

"Engineering with Distinction"
ELECTRICAL CONSULTANTS, INC.

THIS DRAWING IS THE PROPERTY OF ELECTRICAL CONSULTANTS, INC. AND IS TO BE USED ONLY FOR THE SPECIFIC PROJECT IDENTIFIED ON THE DRAWING. NO REVISIONS SHALL BE MADE WITHOUT THE EXPRESSED WRITTEN CONSENT OF ELECTRICAL CONSULTANTS, INC.

DRAWN BY: SAM	DATE: 08/22/2024	WOODLAND PULP, LLC WOODLAND FISH LIFT PASSAGE
CHECKED BY: CMM	DATE: 08/22/2024	WIRING DIAGRAM - INTERIOR - PLC RACK 1 FISH LIFT CONTROL PANEL (FLCP)
APPROVED BY: CMH	DATE: 08/22/2024	TECHNOLOGY: HYDRO / DRAWING CATEGORY: WIRING DIAGRAMS
SCALE: NONE	PROJECT NO.: ARL-007	DWG: EE-ED-003 / REV: 0

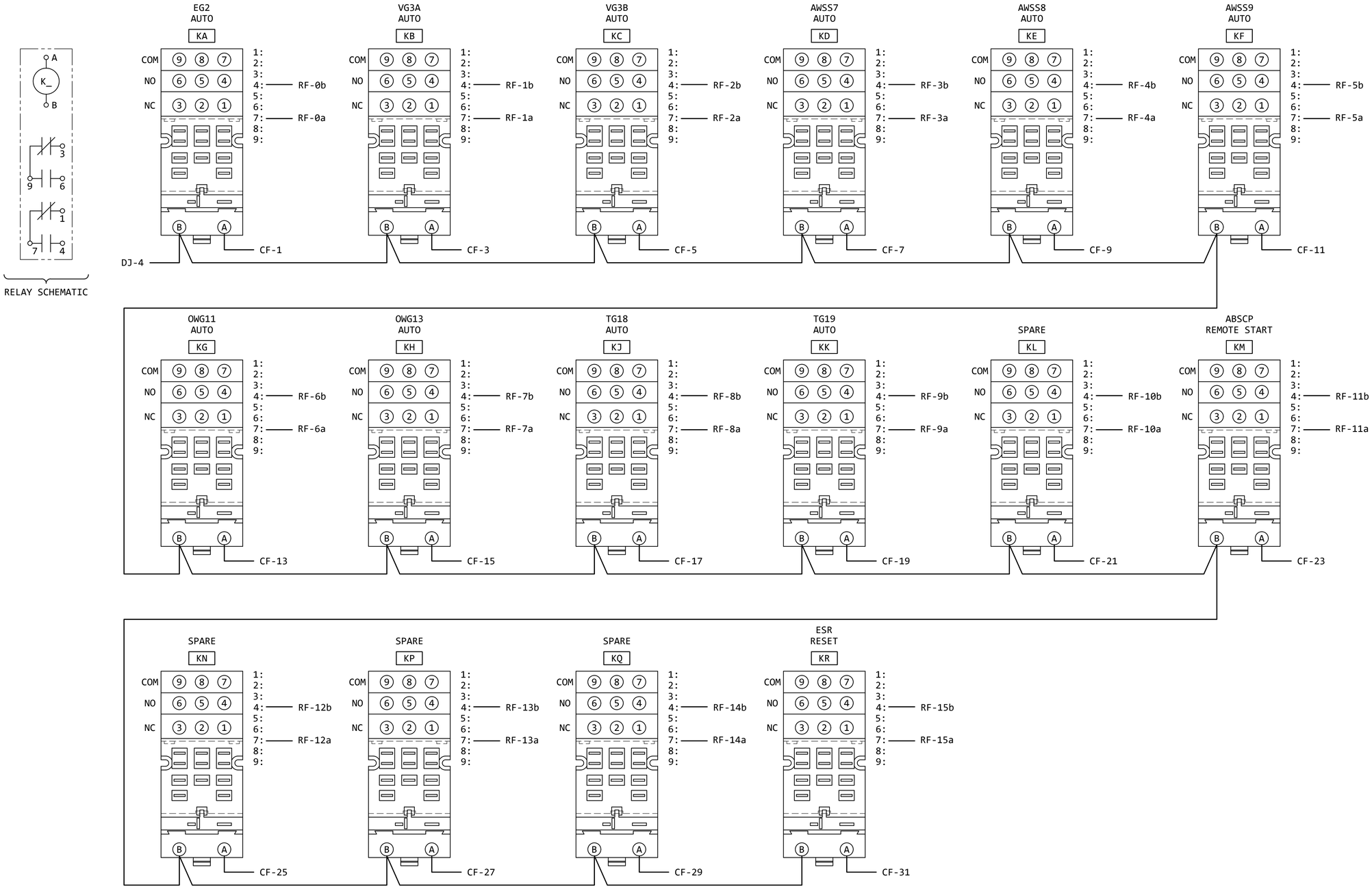

REVISION

REV	DATE	DR	CK	AP	DESCRIPTION
0	03/28/2025	SAM	CMM	CMH	ISSUED FOR CONSTRUCTION

ECI "Engineering with Distinction"
ELECTRICAL CONSULTANTS, INC.

THIS DRAWING IS THE PROPERTY OF ELECTRICAL CONSULTANTS, INC. AND IS TO BE USED ONLY FOR THE SPECIFIC PROJECT IDENTIFIED ON THE DRAWING. NO REVISIONS SHALL BE MADE WITHOUT THE EXPRESSED WRITTEN CONSENT OF ELECTRICAL CONSULTANTS, INC.

DRAWN BY: SAM	DATE: 08/22/2024	WOODLAND PULP, LLC WOODLAND FISH LIFT PASSAGE
CHECKED BY: CMM	DATE: 08/22/2024	WIRING DIAGRAM - INTERIOR - CONTROL RELAYS FISH LIFT CONTROL PANEL (FLCP)
APPROVED BY: CMH	DATE: 08/22/2024	TECHNOLOGY: HYDRO / DRAWING CATEGORY: WIRING DIAGRAMS
SCALE: NONE	PROJECT NO.: ARL-007	DWG: EE-ED-004 / REV: 0

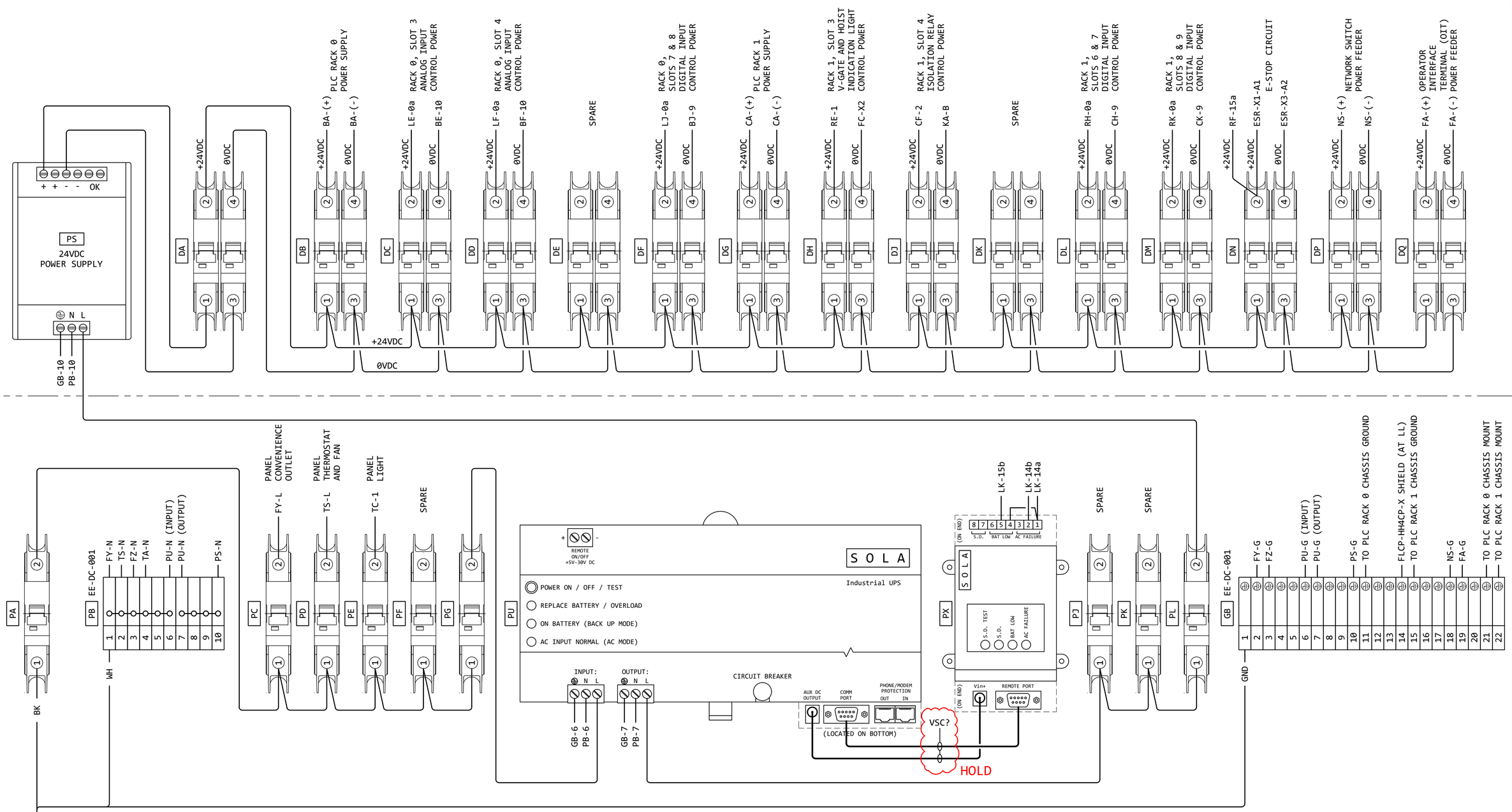

REVISION

REV	DATE	DR	CK	AP	DESCRIPTION
0	03/28/2025	SAM	CMM	CMH	ISSUED FOR CONSTRUCTION

"Engineering with Distinction"
ELECTRICAL CONSULTANTS, INC.

THIS DRAWING IS THE PROPERTY OF ELECTRICAL CONSULTANTS, INC. AND IS TO BE USED ONLY FOR THE SPECIFIC PROJECT IDENTIFIED ON THE DRAWING. NO REVISIONS SHALL BE MADE WITHOUT THE EXPRESSED WRITTEN CONSENT OF ELECTRICAL CONSULTANTS, INC.

DRAWN BY: SAM	DATE: 08/22/2024	WOODLAND PULP, LLC WOODLAND FISH LIFT PASSAGE
CHECKED BY: CMM	DATE: 08/22/2024	WIRING DIAGRAM - INTERIOR - AC AND DC POWER FISH LIFT CONTROL PANEL (FLCP)
APPROVED BY: CMH	DATE: 08/22/2024	TECHNOLOGY: HYDRO / DRAWING CATEGORY: WIRING DIAGRAMS
SCALE: NONE	PROJECT NO.: ARL-007	DWG: EE-ED-005 / REV: 0

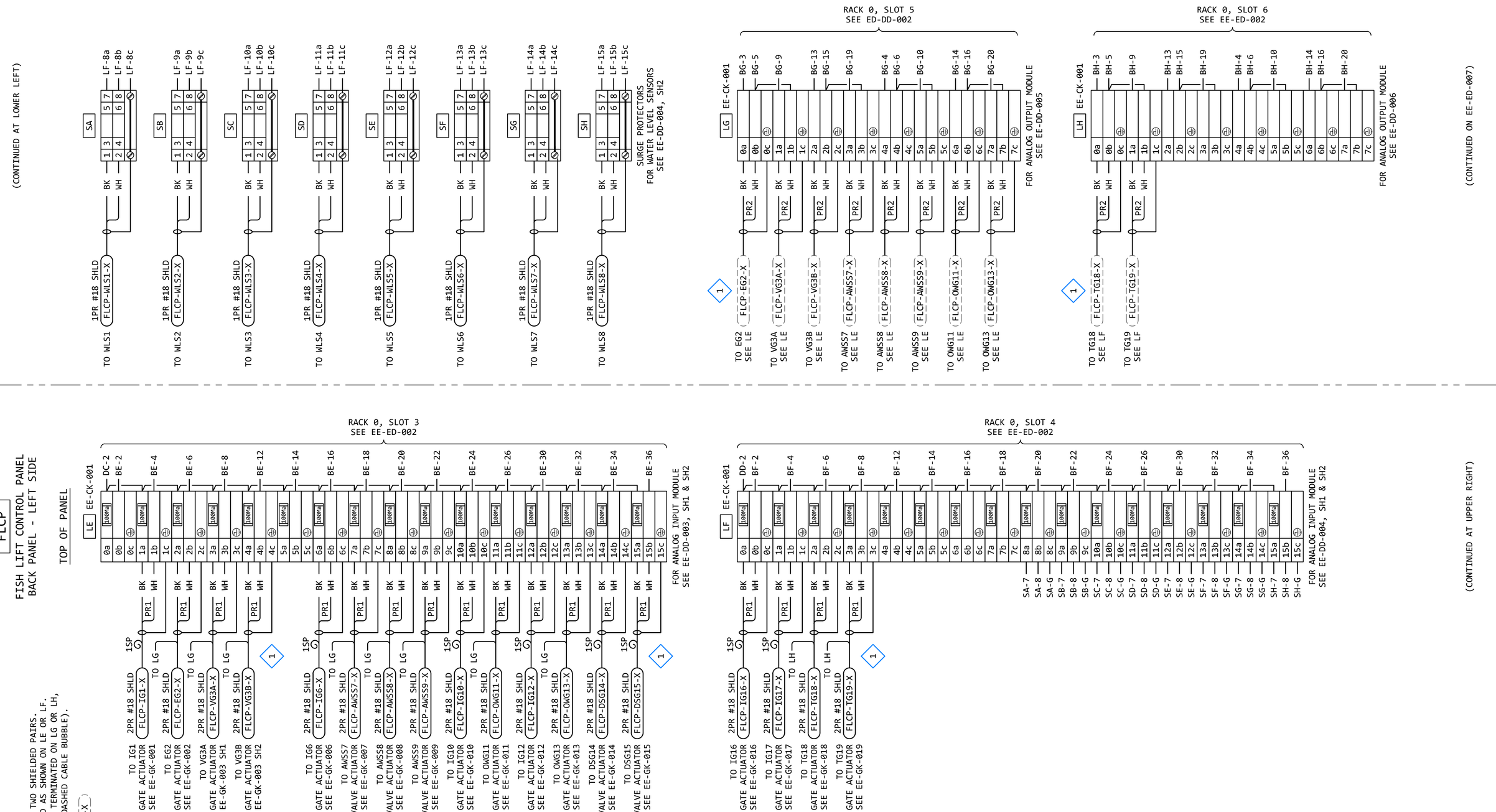

KEYED NOTES:

1. EACH CABLE CONTAINS TWO SHIELDED PAIRS.
   PAIR 1 IS TERMINATED AS SHOWN ON LE OR LF.
   PAIR 2 (IF USED) IS TERMINATED ON LG OR LH,
   (SHOWN WITH WITH A DASHED CABLE BUBBLE).

   EXAMPLE: FLCP-EG2-X

REVISION

REV	DATE	DR	CK	AP	DESCRIPTION
0	03/28/2025	SAM	CMM	CMH	ISSUED FOR CONSTRUCTION

ELECTRICAL CONSULTANTS, INC.

THIS DRAWING IS THE PROPERTY OF ELECTRICAL CONSULTANTS, INC. AND IS TO BE USED ONLY FOR THE SPECIFIC PROJECT IDENTIFIED ON THE DRAWING. NO REVISIONS SHALL BE MADE WITHOUT THE EXPRESSED WRITTEN CONSENT OF ELECTRICAL CONSULTANTS, INC.

DRAWN BY: SAM	DATE: 08/22/2024	WOODLAND PULP, LLC WOODLAND FISH LIFT PASSAGE
CHECKED BY: CMM	DATE: 08/22/2024	WIRING DIAGRAM - LEFT SIDE - SHEET 1 FISH LIFT CONTROL PANEL (FLCP)
APPROVED BY: CMH	DATE: 08/22/2024	TECHNOLOGY: HYDRO / DRAWING CATEGORY: WIRING DIAGRAMS
SCALE: NONE	PROJECT NO.: ARL-007	DWG: EE-ED-006 / REV: 0

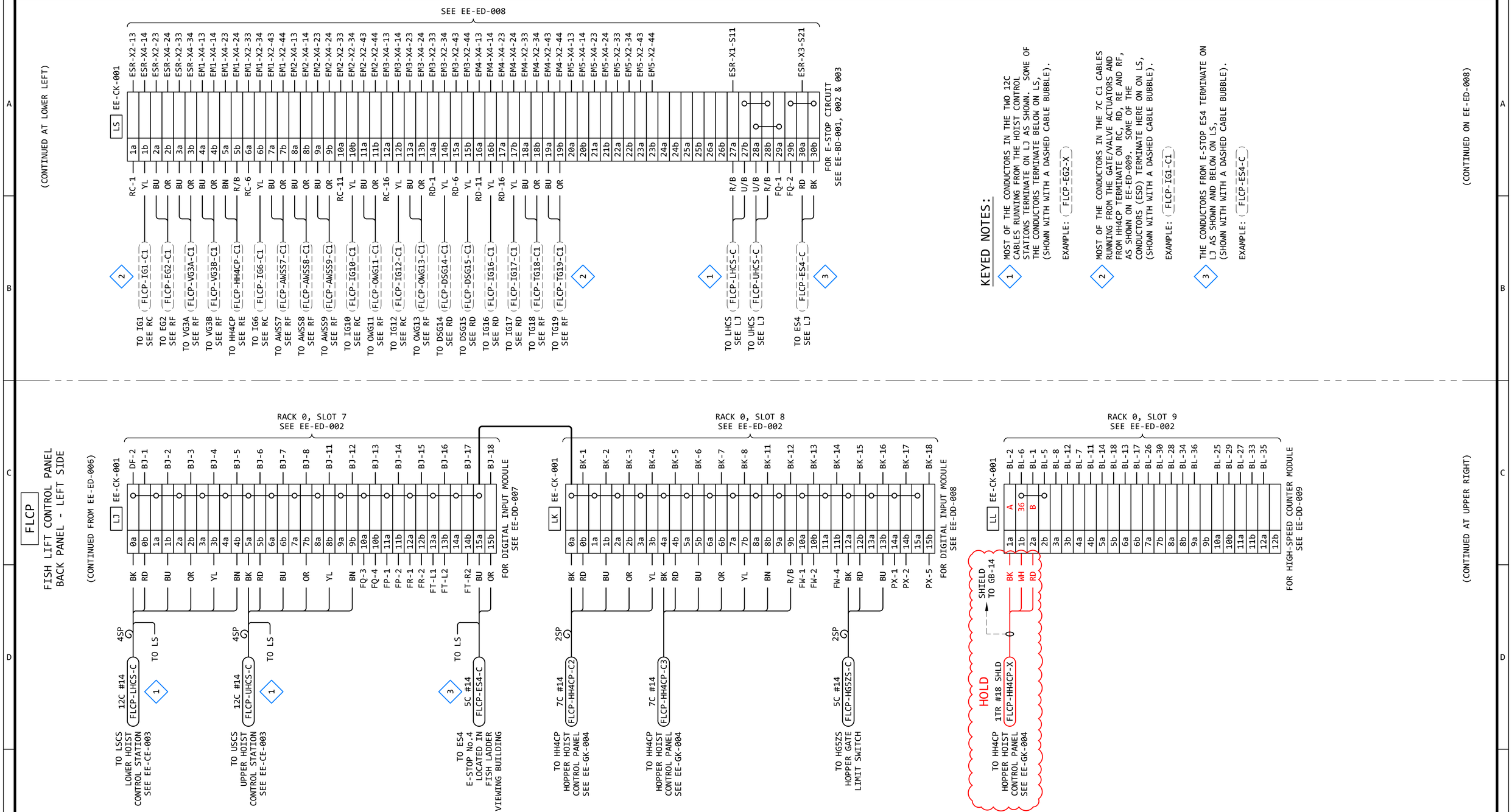

REVISION

REV	DATE	DR	CK	AP	DESCRIPTION
0	03/28/2025	SAM	CMM	CMH	ISSUED FOR CONSTRUCTION

ELECTRICAL CONSULTANTS, INC.
"Engineering with Distinction"

THIS DRAWING IS THE PROPERTY OF ELECTRICAL CONSULTANTS, INC. AND IS TO BE USED ONLY FOR THE SPECIFIC PROJECT IDENTIFIED ON THE DRAWING. NO REVISIONS SHALL BE MADE WITHOUT THE EXPRESSED WRITTEN CONSENT OF ELECTRICAL CONSULTANTS, INC.

DRAWN BY: SAM	DATE: 08/22/2024	WOODLAND PULP, LLC WOODLAND FISH LIFT PASSAGE
CHECKED BY: CMM	DATE: 08/22/2024	WIRING DIAGRAM - LEFT SIDE - SHEET 2 FISH LIFT CONTROL PANEL (FLCP)
APPROVED BY: CMH	DATE: 08/22/2024	TECHNOLOGY: HYDRO / DRAWING CATEGORY: WIRING DIAGRAMS
SCALE: NONE	PROJECT NO.: ARL-007	DWG: EE-ED-007 / REV: 0

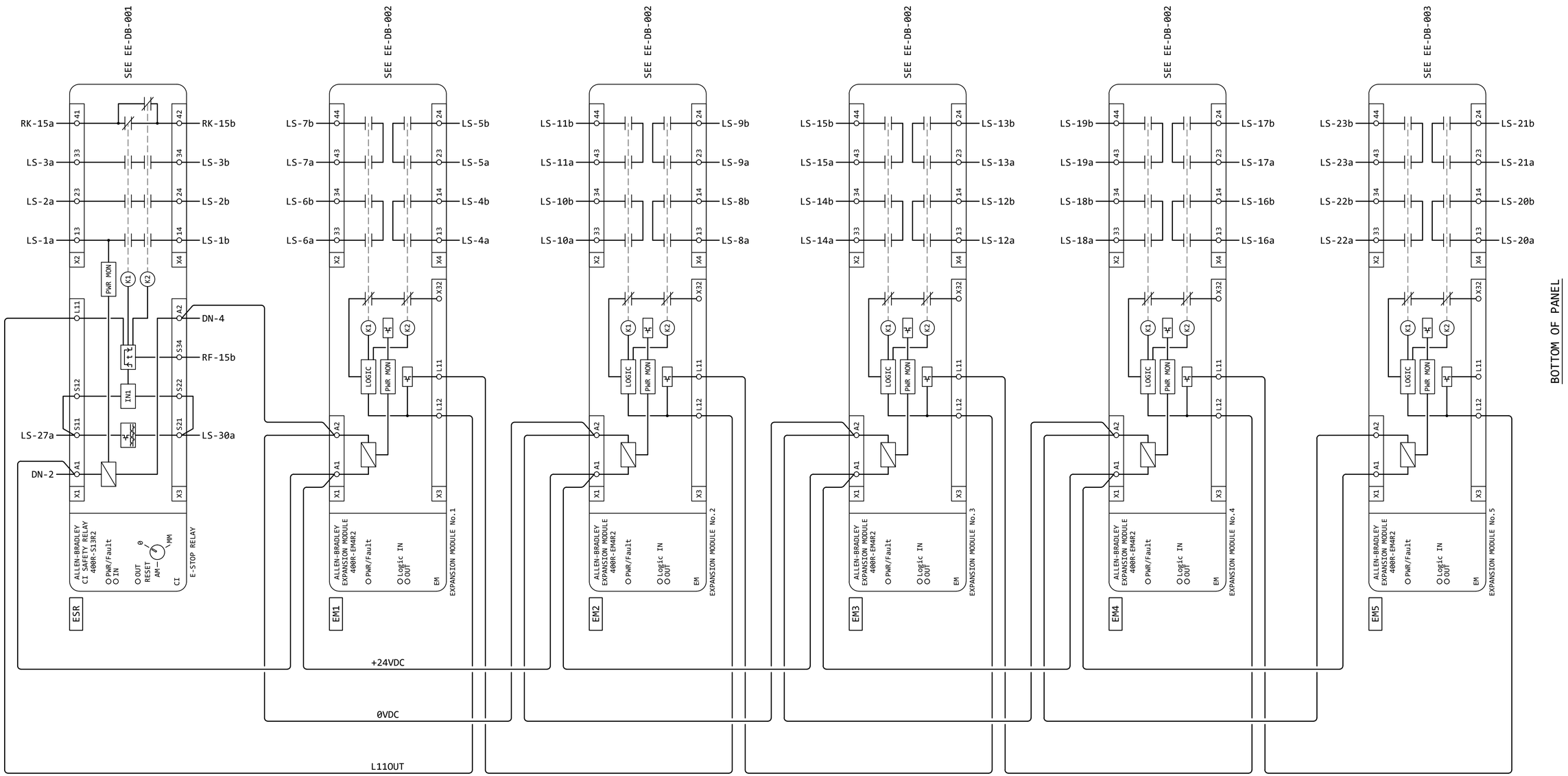

REVISION

REV	DATE	DR	CK	AP	DESCRIPTION
0	03/28/2025	SAM	CMM	CMH	ISSUED FOR CONSTRUCTION

ECI "Engineering with Distinction"
ELECTRICAL CONSULTANTS, INC.

THIS DRAWING IS THE PROPERTY OF ELECTRICAL CONSULTANTS, INC. AND IS TO BE USED ONLY FOR THE SPECIFIC PROJECT IDENTIFIED ON THE DRAWING. NO REVISIONS SHALL BE MADE WITHOUT THE EXPRESSED WRITTEN CONSENT OF ELECTRICAL CONSULTANTS, INC.

DRAWN BY: SAM	DATE: 08/22/2024	WOODLAND PULP, LLC WOODLAND FISH LIFT PASSAGE
CHECKED BY: CMM	DATE: 08/22/2024	WIRING DIAGRAM - LEFT SIDE - SHEET 3 FISH LIFT CONTROL PANEL (FLCP)
APPROVED BY: CMH	DATE: 08/22/2024	TECHNOLOGY: HYDRO / DRAWING CATEGORY: WIRING DIAGRAMS
SCALE: NONE	PROJECT NO.: ARL-007	DWG: EE-ED-008 / REV: 0

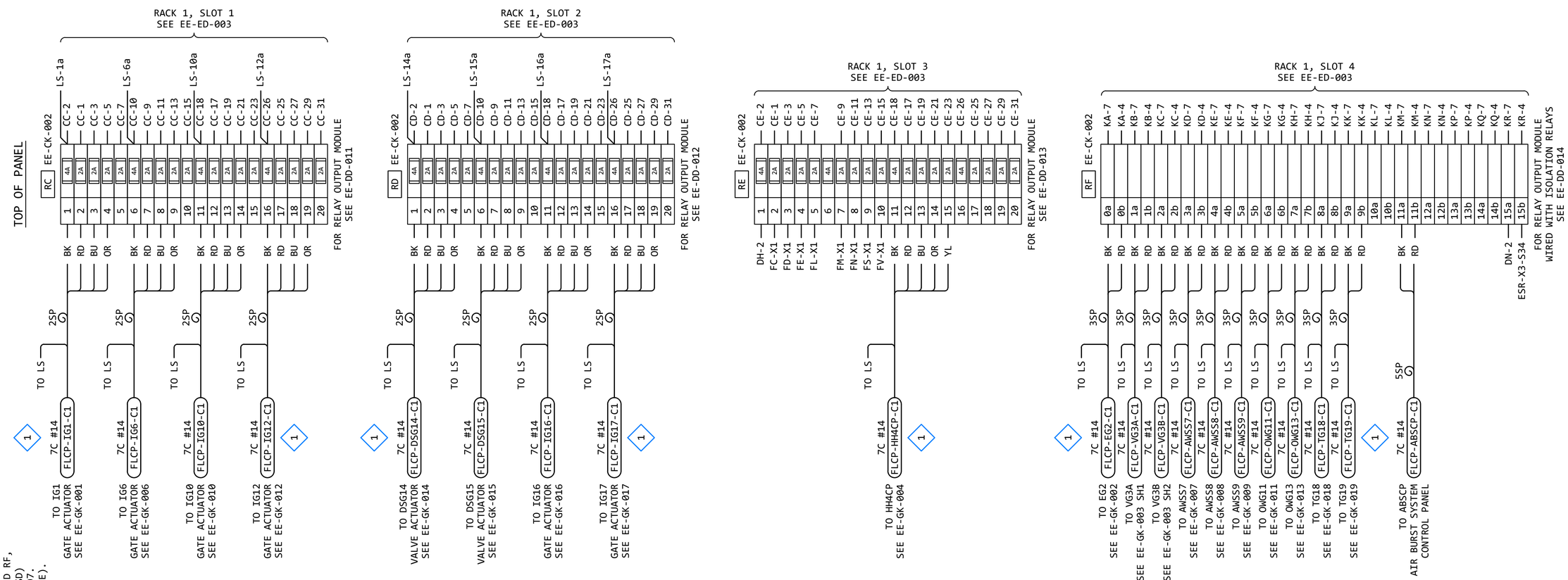

KEYED NOTES:

1. MOST OF THE CONDUCTORS IN THE 7C C1 CABLES RUNNING FROM THE GATE/VALVE ACTUATORS AND FROM HH4CP TERMINATE ON RC, RD, RE AND RF, AS SHOWN. SOME OF THE CONDUCTORS (ESD) TERMINATE ON LS, AS SHOWN ON EE-ED-007. (SHOWN WITH WITH A DASHED CABLE BUBBLE).

EXAMPLE: FLCP-IG1-C1

REVISION					
REV	DATE	DR	CK	AP	DESCRIPTION
0	03/28/2025	SAM	CMM	CMH	ISSUED FOR CONSTRUCTION

ECI "Engineering with Distinction"
ELECTRICAL CONSULTANTS, INC.

THIS DRAWING IS THE PROPERTY OF ELECTRICAL CONSULTANTS, INC. AND IS TO BE USED ONLY FOR THE SPECIFIC PROJECT IDENTIFIED ON THE DRAWING. NO REVISIONS SHALL BE MADE WITHOUT THE EXPRESSED WRITTEN CONSENT OF ELECTRICAL CONSULTANTS, INC.

DRAWN BY: SAM	DATE: 08/22/2024	WOODLAND PULP, LLC WOODLAND FISH LIFT PASSAGE
CHECKED BY: CMM	DATE: 08/22/2024	WIRING DIAGRAM - RIGHT SIDE - SHEET 1 FISH LIFT CONTROL PANEL (FLCP)
APPROVED BY: CMH	DATE: 08/22/2024	TECHNOLOGY: HYDRO / DRAWING CATEGORY: WIRING DIAGRAMS
SCALE: NONE	PROJECT NO.: ARL-007	DWG: EE-ED-009 / REV: 0

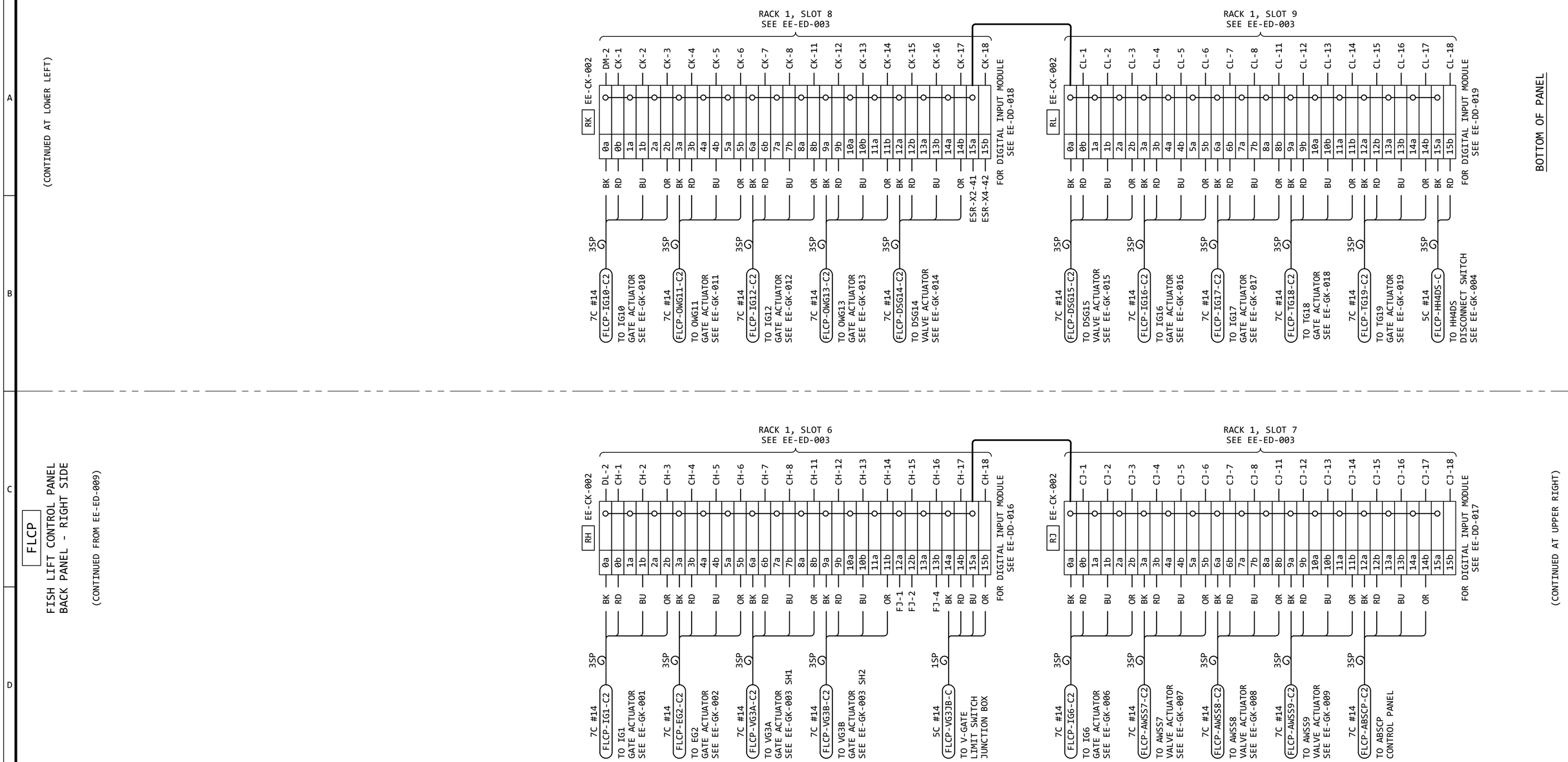

REVISION

REV	DATE	DR	CK	AP	DESCRIPTION
0	03/28/2025	SAM	CMM	CMH	ISSUED FOR CONSTRUCTION

ELECTRICAL CONSULTANTS, INC.

"Engineering with Distinction"

THIS DRAWING IS THE PROPERTY OF ELECTRICAL CONSULTANTS, INC. AND IS TO BE USED ONLY FOR THE SPECIFIC PROJECT IDENTIFIED ON THE DRAWING. NO REVISIONS SHALL BE MADE WITHOUT THE EXPRESSED WRITTEN CONSENT OF ELECTRICAL CONSULTANTS, INC.

DRAWN BY: SAM	DATE: 08/22/2024	WOODLAND PULP, LLC WOODLAND FISH LIFT PASSAGE
CHECKED BY: CMM	DATE: 08/22/2024	WIRING DIAGRAM - RIGHT SIDE - SHEET 2 FISH LIFT CONTROL PANEL (FLCP)
APPROVED BY: CMH	DATE: 08/22/2024	TECHNOLOGY: HYDRO DRAWING CATEGORY: WIRING DIAGRAMS
SCALE: NONE	PROJECT NO.: ARL-007	DWG: EE-ED-010 REV: 0

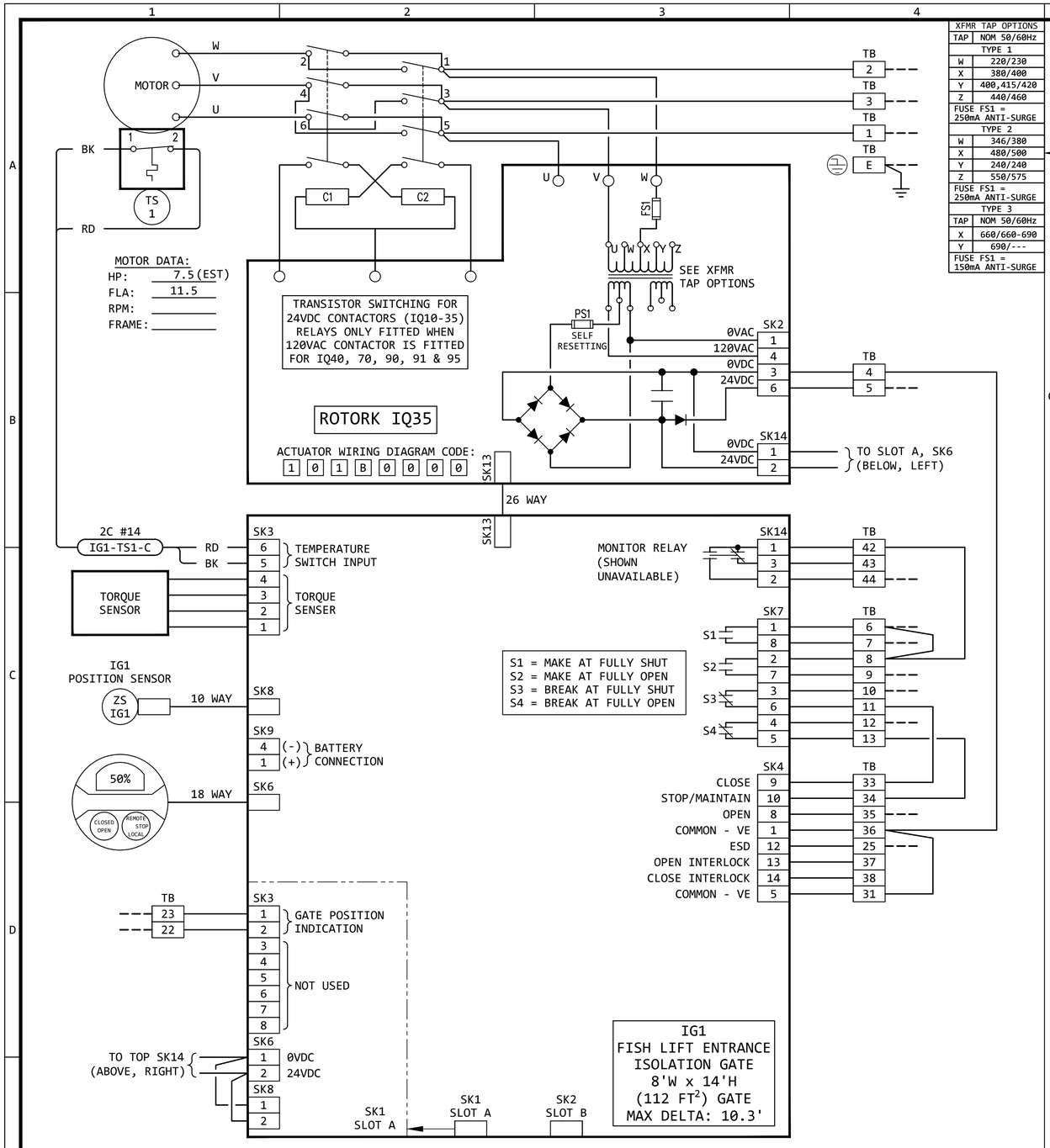

XFMR TAP OPTIONS	
TAP	NOM 50/60Hz
TYPE 1	
W	220/230
X	380/400
Y	400,415/420
Z	440/460
FUSE FS1 = 250mA ANTI-SURGE	
TYPE 2	
W	346/380
X	480/500
Y	240/240
Z	550/575
FUSE FS1 = 250mA ANTI-SURGE	
TYPE 3	
TAP	NOM 50/60Hz
X	660/660-690
Y	690/---
FUSE FS1 = 150mA ANTI-SURGE	

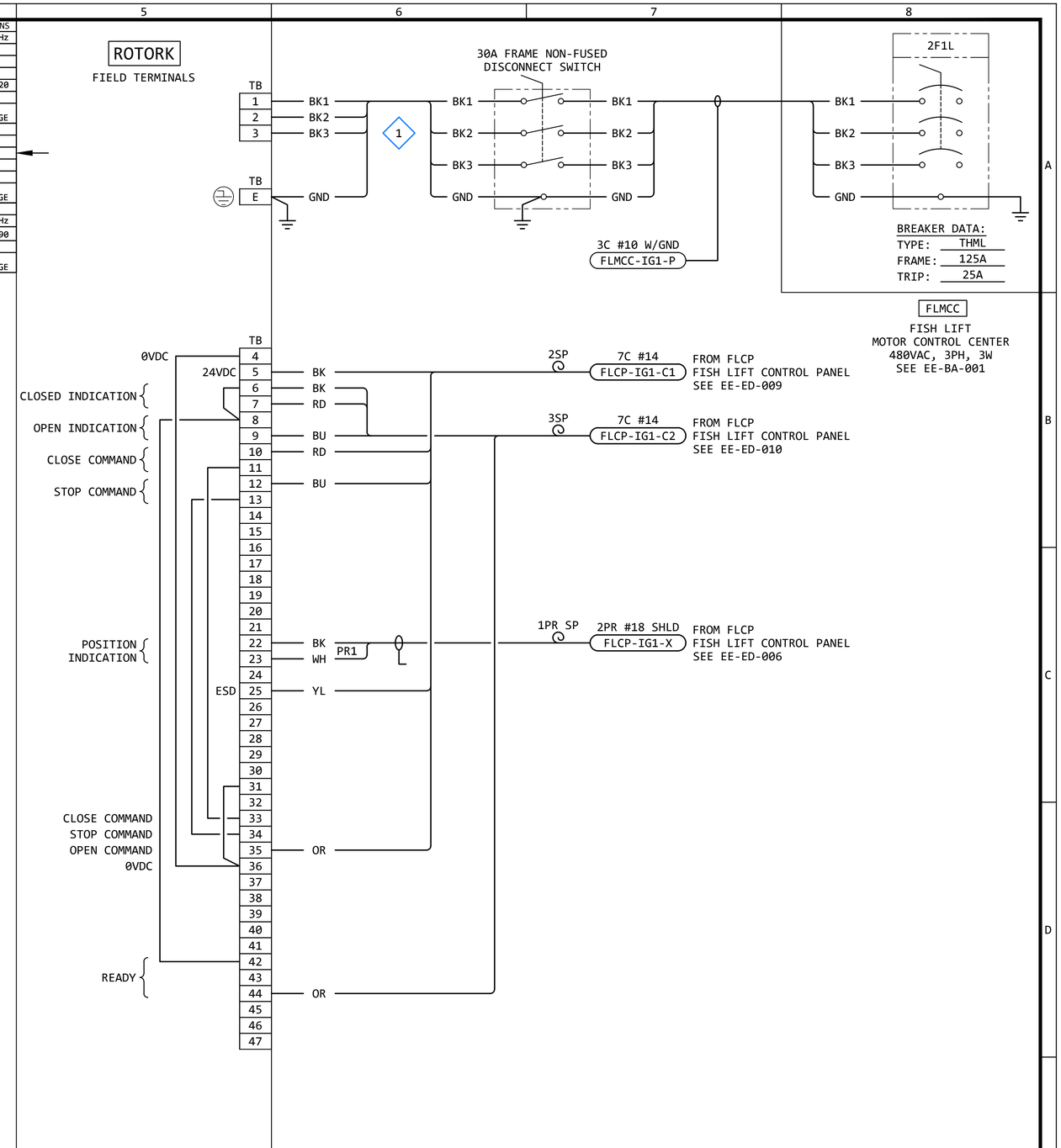

GENERAL NOTES:

1. THE DESIGN SHOWN IS BASED ON ROTORK CIRCUIT DIAGRAM No. 101B0000, ISSUE 6, DATED 160614. SEE EE-DK-001 FOR MORE DETAILS.
2. TERMINAL NUMBERS ARE SUBJECT TO CHANGE. REFER TO CIRCUIT DIAGRAMS SUPPLIED WITH EQUIPMENT.

KEYED NOTES:

1. THE CABLES ON THE LOAD SIDE OF THE DISCONNECT SWITCH SHALL MATCH THE LINE SIDE CABLES.

REVISION

REV	DATE	DR	CK	AP	DESCRIPTION
0	03/28/2025	SAM	CMM	CMH	ISSUED FOR CONSTRUCTION

ECI "Engineering with Distinction" ELECTRICAL CONSULTANTS, INC.

THIS DRAWING IS THE PROPERTY OF ELECTRICAL CONSULTANTS, INC. AND IS TO BE USED ONLY FOR THE SPECIFIC PROJECT IDENTIFIED ON THE DRAWING. NO REVISIONS SHALL BE MADE WITHOUT THE EXPRESSED WRITTEN CONSENT OF ELECTRICAL CONSULTANTS, INC.

DRAWN BY: SAM	DATE: 02/22/2024	WOODLAND PULP, LLC WOODLAND FISH LIFT PASSAGE	
CHECKED BY: CMM	DATE: 02/22/2024	INTERCONNECTION DIAGRAM FISH LIFT ENTRANCE ISOLATION GATE (IG1)	
APPROVED BY: CMH	DATE: 02/22/2024	TECHNOLOGY: HYDRO	DRAWING CATEGORY: INTERCONNECTS
SCALE: NONE	PROJECT NO.: ARL-007	DWG: EE-GK-001	REV: 0

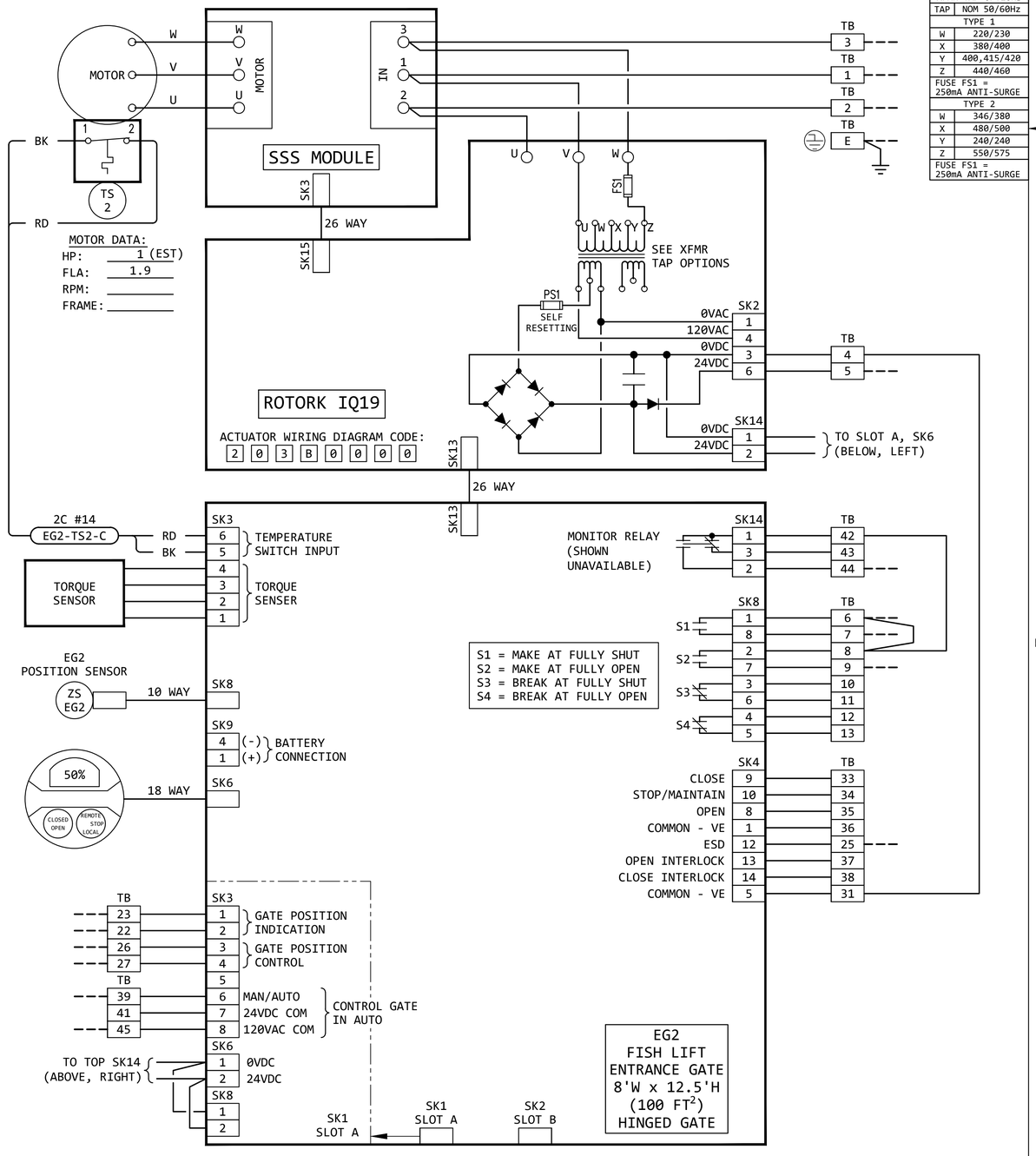

XFMR TAP OPTIONS	
TAP	NOM 50/60Hz
TYPE 1	
W	220/230
X	380/400
Y	400,415/420
Z	440/460
FUSE FS1 = 250mA ANTI-SURGE	
TYPE 2	
W	346/380
X	480/500
Y	240/240
Z	550/575
FUSE FS1 = 250mA ANTI-SURGE	

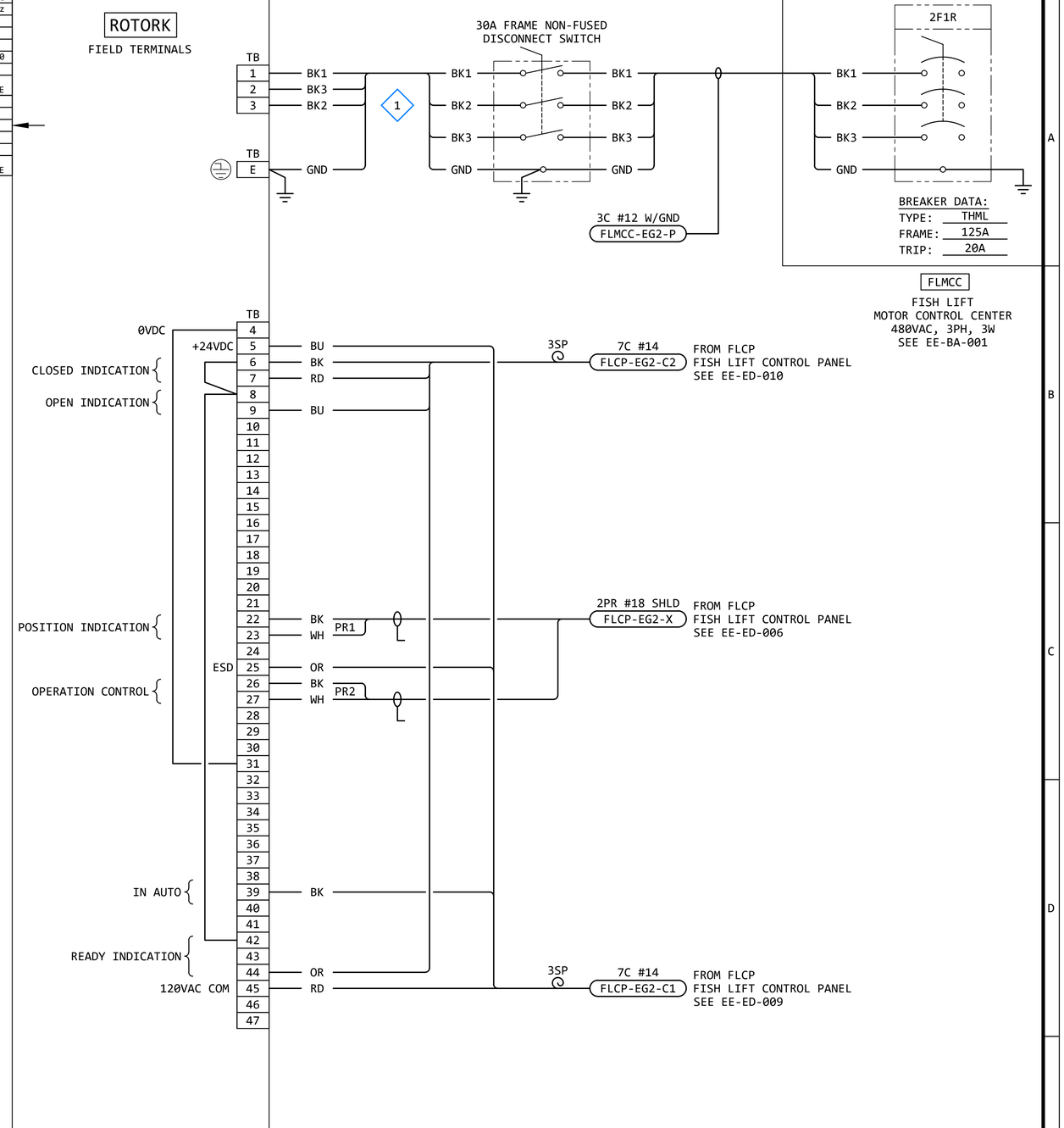

GENERAL NOTES:

1. THE DESIGN SHOWN IS BASED ON ROTORK CIRCUIT DIAGRAM No. 203B0000, ISSUE 6, DATED 290520. SEE EE-DK-002 FOR MORE DETAILS.
2. TERMINAL NUMBERS ARE SUBJECT TO CHANGE. REFER TO CIRCUIT DIAGRAMS SUPPLIED WITH EQUIPMENT.

KEYED NOTES:

1. THE CABLES ON THE LOAD SIDE OF THE DISCONNECT SWITCH SHALL MATCH THE LINE SIDE CABLES.

REVISION

REV	DATE	DR	CK	AP	DESCRIPTION
0	03/28/2025	SAM	CMM	CMH	ISSUED FOR CONSTRUCTION

ECI "Engineering with Distinction"
ELECTRICAL CONSULTANTS, INC.

THIS DRAWING IS THE PROPERTY OF ELECTRICAL CONSULTANTS, INC. AND IS TO BE USED ONLY FOR THE SPECIFIC PROJECT IDENTIFIED ON THE DRAWING. NO REVISIONS SHALL BE MADE WITHOUT THE EXPRESSED WRITTEN CONSENT OF ELECTRICAL CONSULTANTS, INC.

DRAWN BY: SAM	DATE: 02/22/2024	WOODLAND PULP, LLC WOODLAND FISH LIFT PASSAGE
CHECKED BY: CMM	DATE: 02/22/2024	INTERCONNECTION DIAGRAM FISH LIFT ENTRANCE GATE (EG2)
APPROVED BY: CMH	DATE: 02/22/2024	TECHNOLOGY: HYDRO / DRAWING CATEGORY: INTERCONNECTS
SCALE: NONE	PROJECT NO.: ARL-007	DWG: EE-GK-002 / REV: 0

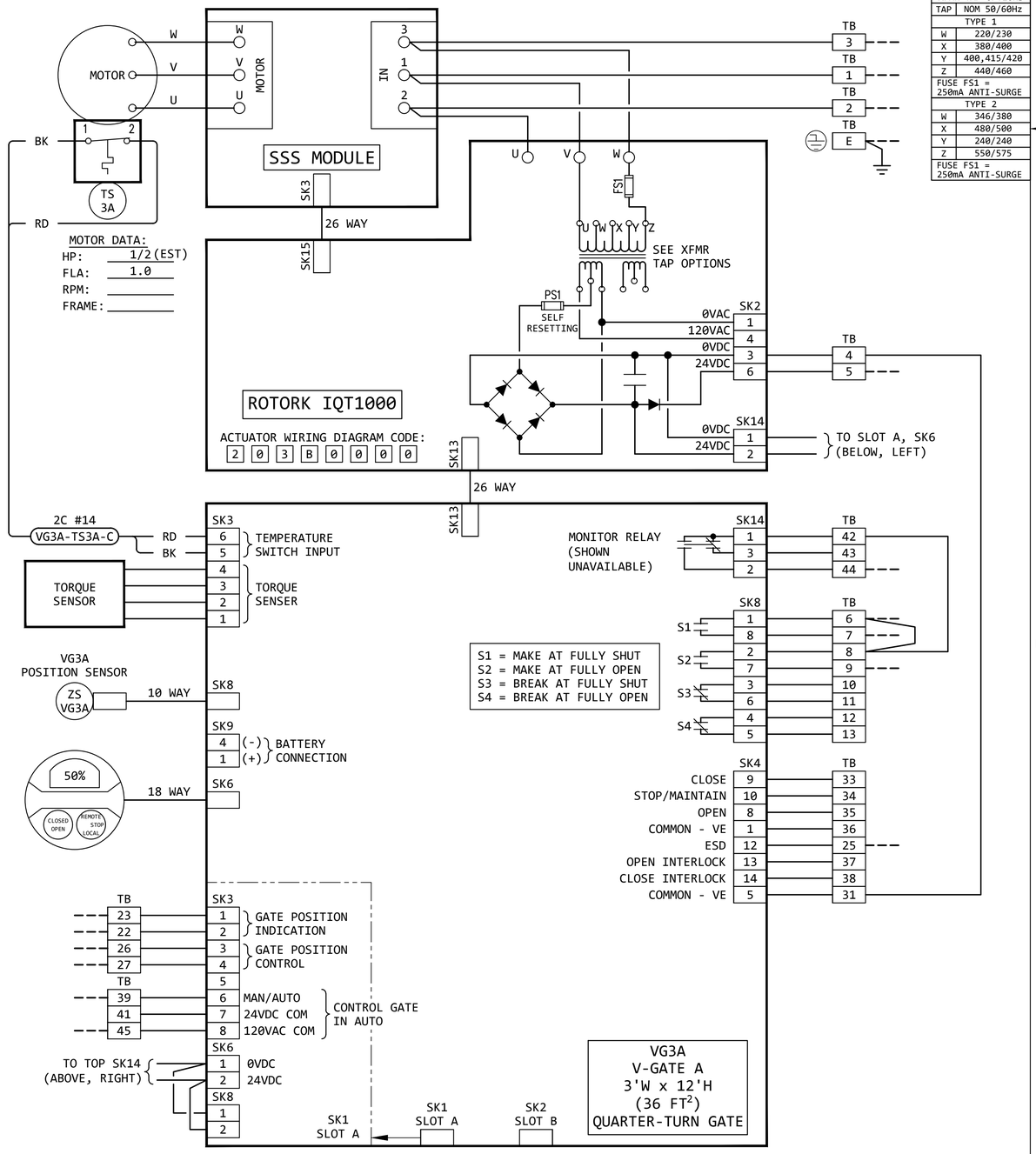

XFMR TAP OPTIONS	
TAP	NOM 50/60Hz
TYPE 1	
W	220/230
X	380/400
Y	400,415/420
Z	440/460
FUSE FS1 = 250mA ANTI-SURGE	
TYPE 2	
W	346/380
X	480/500
Y	240/240
Z	550/575
FUSE FS1 = 250mA ANTI-SURGE	

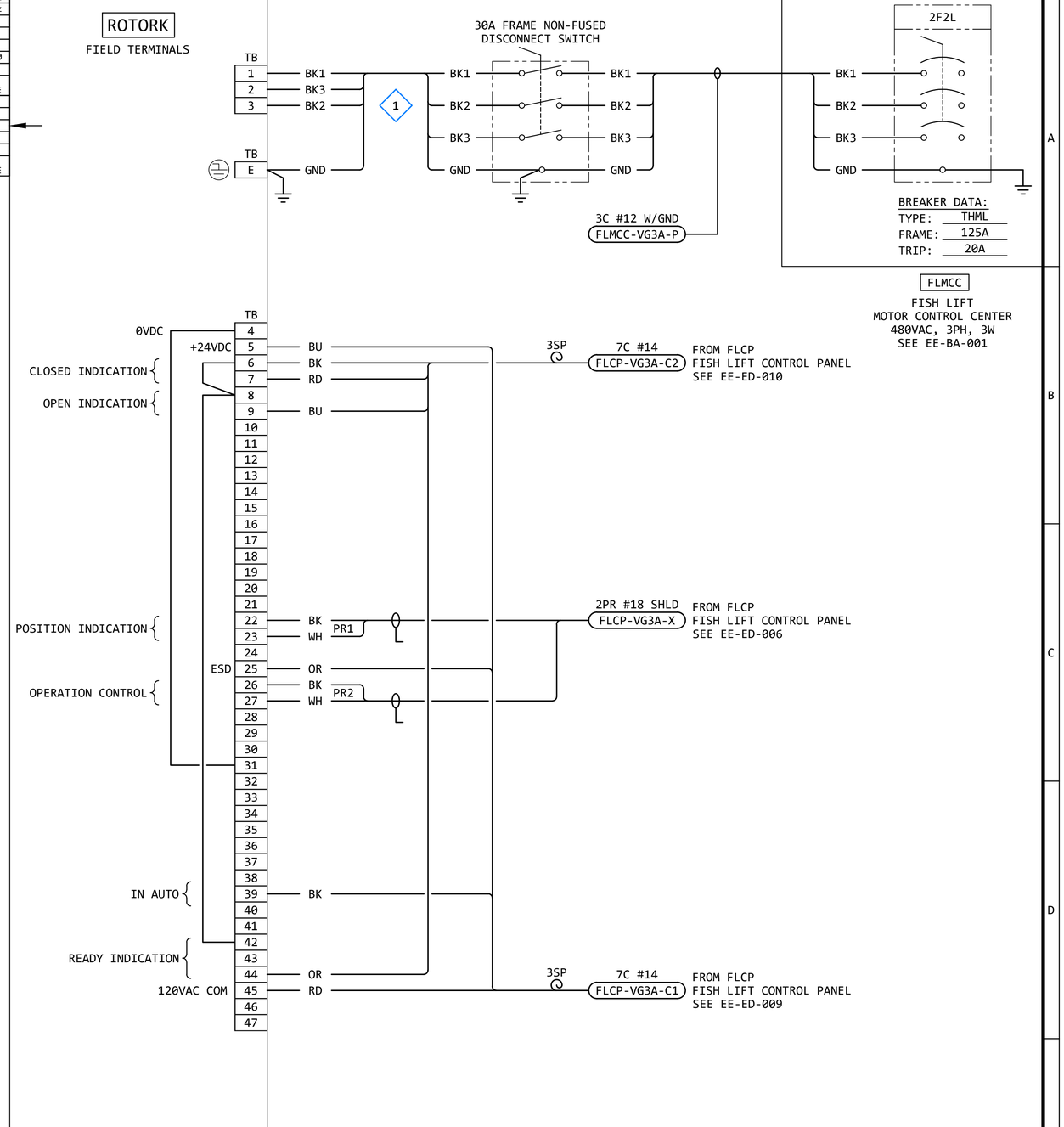

GENERAL NOTES:

1. THE DESIGN SHOWN IS BASED ON ROTORK CIRCUIT DIAGRAM No. 203B0000, ISSUE 6, DATED 290520. SEE EE-DK-002 FOR MORE DETAILS.
2. TERMINAL NUMBERS ARE SUBJECT TO CHANGE. REFER TO CIRCUIT DIAGRAMS SUPPLIED WITH EQUIPMENT.

KEYED NOTES:

1. THE CABLES ON THE LOAD SIDE OF THE DISCONNECT SWITCH SHALL MATCH THE LINE SIDE CABLES.

REVISION

REV	DATE	DR	CK	AP	DESCRIPTION
0	03/28/2025	SAM	CMM	CMH	ISSUED FOR CONSTRUCTION

ECI "Engineering with Distinction" ELECTRICAL CONSULTANTS, INC.

THIS DRAWING IS THE PROPERTY OF ELECTRICAL CONSULTANTS, INC. AND IS TO BE USED ONLY FOR THE SPECIFIC PROJECT IDENTIFIED ON THE DRAWING. NO REVISIONS SHALL BE MADE WITHOUT THE EXPRESSED WRITTEN CONSENT OF ELECTRICAL CONSULTANTS, INC.

DRAWN BY: SAM	DATE: 02/22/2024	WOODLAND PULP, LLC WOODLAND FISH LIFT PASSAGE
CHECKED BY: CMM	DATE: 02/22/2024	INTERCONNECTION DIAGRAM V-GATE A (VG3A)
APPROVED BY: CMH	DATE: 02/22/2024	TECHNOLOGY: HYDRO / DRAWING CATEGORY: INTERCONNECTS
SCALE: NONE	PROJECT NO.: ARL-007	DWG: EE-GK-003 SH1 / REV: 0

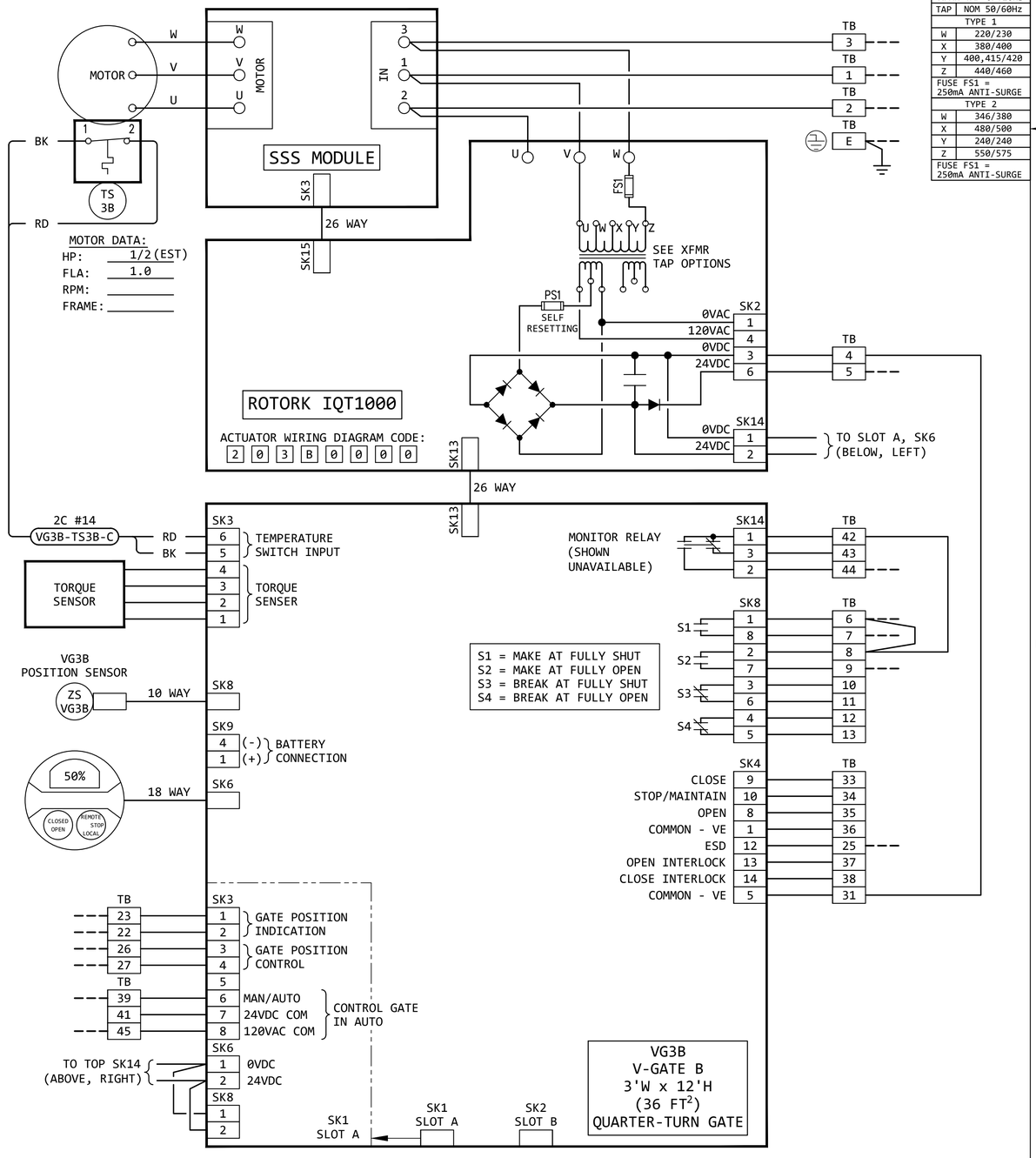

XFMR TAP OPTIONS	
TAP	NOM 50/60Hz
TYPE 1	
W	220/230
X	380/400
Y	400,415/420
Z	440/460
FUSE FS1 = 250mA ANTI-SURGE	
TYPE 2	
W	346/380
X	480/500
Y	240/240
Z	550/575
FUSE FS1 = 250mA ANTI-SURGE	

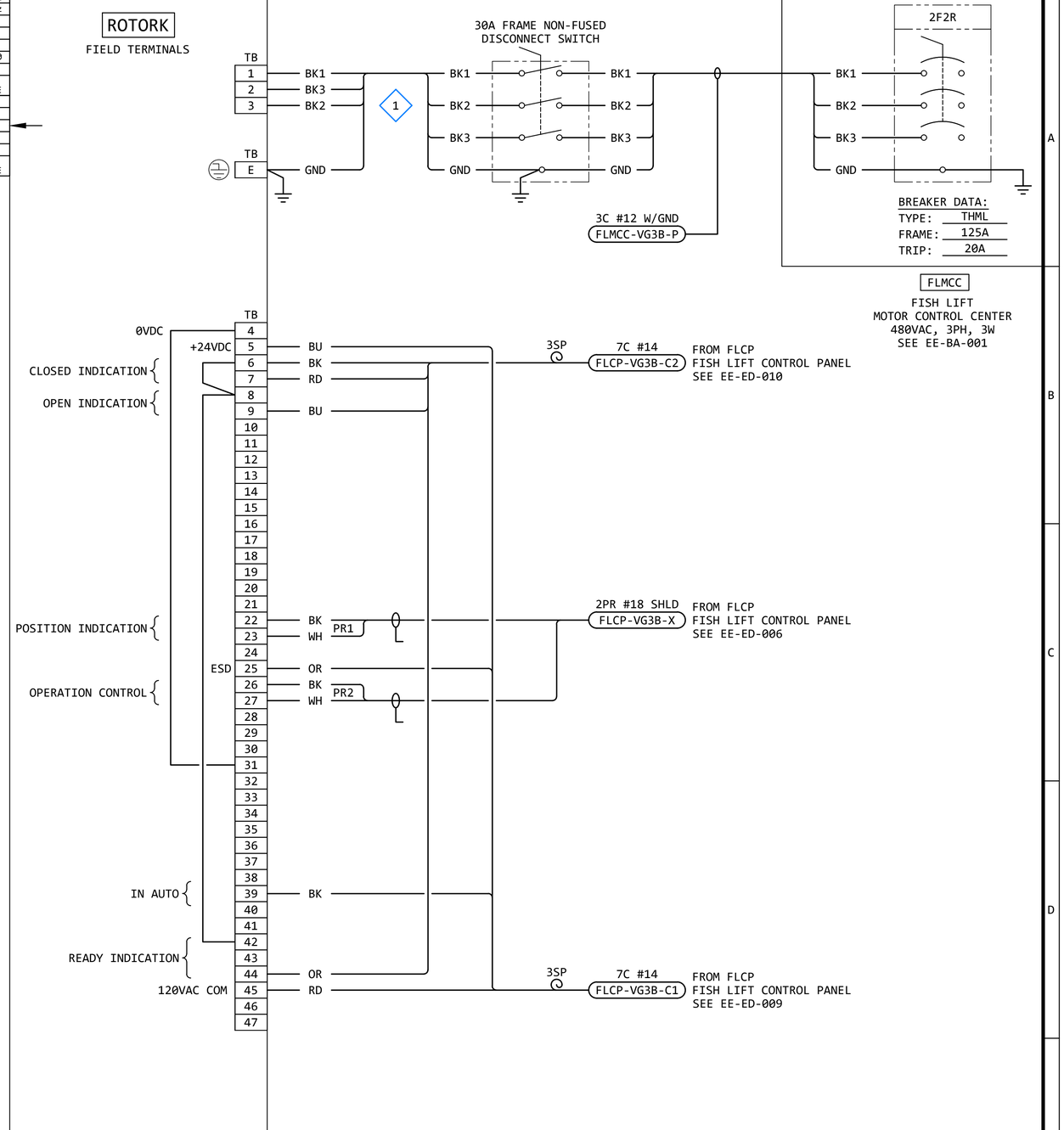

GENERAL NOTES:

1. THE DESIGN SHOWN IS BASED ON ROTORK CIRCUIT DIAGRAM No. 203B0000, ISSUE 6, DATED 290520. SEE EE-DK-002 FOR MORE DETAILS.
2. TERMINAL NUMBERS ARE SUBJECT TO CHANGE. REFER TO CIRCUIT DIAGRAMS SUPPLIED WITH EQUIPMENT.

KEYED NOTES:

1. THE CABLES ON THE LOAD SIDE OF THE DISCONNECT SWITCH SHALL MATCH THE LINE SIDE CABLES.

REVISION

REV	DATE	DR	CK	AP	DESCRIPTION
0	03/28/2025	SAM	CMM	CMH	ISSUED FOR CONSTRUCTION

ECI "Engineering with Distinction"
ELECTRICAL CONSULTANTS, INC.

THIS DRAWING IS THE PROPERTY OF ELECTRICAL CONSULTANTS, INC. AND IS TO BE USED ONLY FOR THE SPECIFIC PROJECT IDENTIFIED ON THE DRAWING. NO REVISIONS SHALL BE MADE WITHOUT THE EXPRESSED WRITTEN CONSENT OF ELECTRICAL CONSULTANTS, INC.

DRAWN BY: SAM	DATE: 02/22/2024	WOODLAND PULP, LLC WOODLAND FISH LIFT PASSAGE
CHECKED BY: CMM	DATE: 02/22/2024	INTERCONNECTION DIAGRAM V-GATE B (VG3B)
APPROVED BY: CMH	DATE: 02/22/2024	TECHNOLOGY: HYDRO DRAWING CATEGORY: INTERCONNECTS
SCALE: NONE	PROJECT NO.: ARL-007	DWG: EE-GK-003 SH2 REV: 0

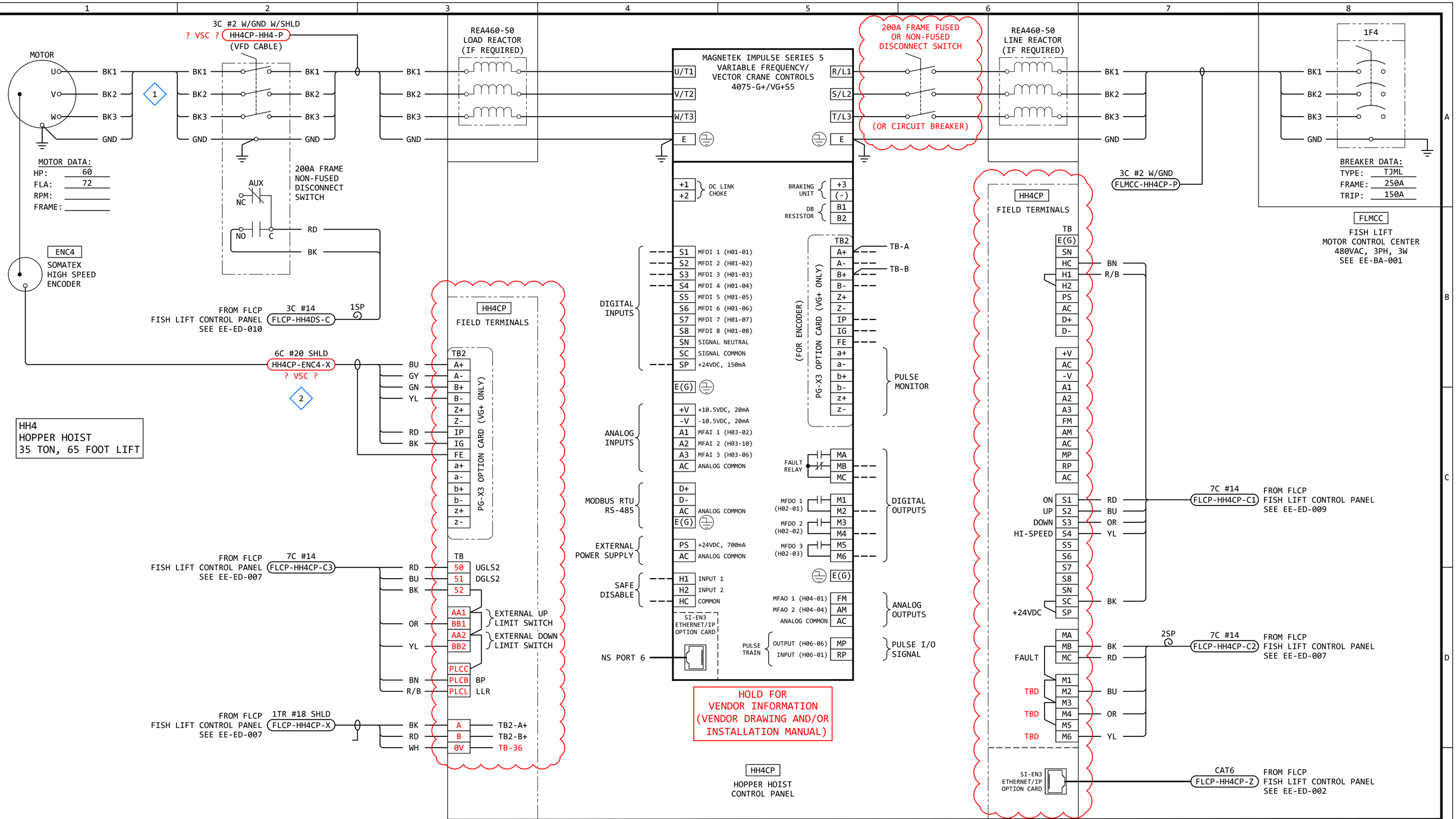

GENERAL NOTES:

1. THE DESIGN SHOWN IS BASED ON MAGNETEK IMPULSE G+/VG+ SERIES 5 TECHNICAL MANUAL, DATED AUGUST 2023.
2. TERMINAL NUMBERS ARE SUBJECT TO CHANGE. REFER TO CIRCUIT DIAGRAMS SUPPLIED WITH EQUIPMENT.

KEYED NOTES:

1. THE CABLES ON THE LOAD SIDE OF THE DISCONNECT SWITCH SHALL MATCH THE LINE SIDE CABLES.
2. USE TWISTED PAIR, SHIELDED CABLE 100 OHM IMPEDANCE, LESS THAN 300FT. (BELDEN 9730 OR MAGNETEK R-20/6, R-22/6, OR EQUIVALENT).

REVISION

REV	DATE	DR	CK	AP	DESCRIPTION
0	03/28/2025	SAM	CMM	CMH	ISSUED FOR CONSTRUCTION

ECI "Engineering with Distinction"
ELECTRICAL CONSULTANTS, INC.

THIS DRAWING IS THE PROPERTY OF ELECTRICAL CONSULTANTS, INC. AND IS TO BE USED ONLY FOR THE SPECIFIC PROJECT IDENTIFIED ON THE DRAWING. NO REVISIONS SHALL BE MADE WITHOUT THE EXPRESSED WRITTEN CONSENT OF ELECTRICAL CONSULTANTS, INC.

DRAWN BY: SAM	DATE: 08/22/2024	WOODLAND PULP, LLC WOODLAND FISH LIFT PASSAGE
CHECKED BY: CMM	DATE: 08/22/2024	INTERCONNECTION DIAGRAM HOPPER HOIST (HH4)
APPROVED BY: CMH	DATE: 08/22/2024	TECHNOLOGY: HYDRO / DRAWING CATEGORY: INTERCONNECTS
SCALE: NONE	PROJECT NO.: ARL-007	DWG: EE-GK-004 / REV: 0

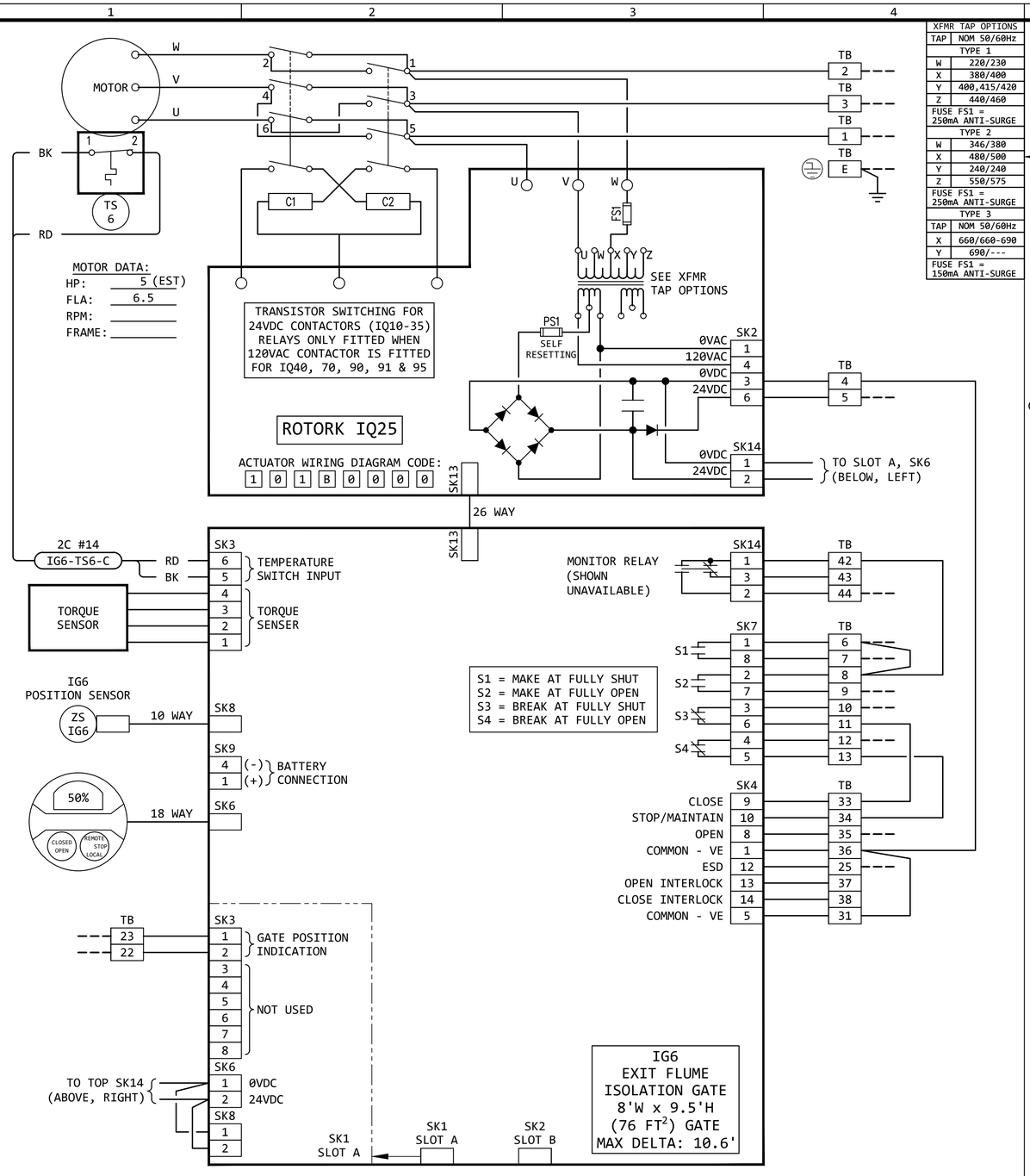

XFMR TAP OPTIONS	
TAP	NOM 50/60Hz
TYPE 1	
W	220/230
X	380/400
Y	400,415/420
Z	440/460
FUSE FS1 = 250mA ANTI-SURGE	
TYPE 2	
W	346/380
X	480/500
Y	240/240
Z	550/575
FUSE FS1 = 250mA ANTI-SURGE	
TYPE 3	
TAP	NOM 50/60Hz
X	660/660-690
Y	690/---
FUSE FS1 = 150mA ANTI-SURGE	

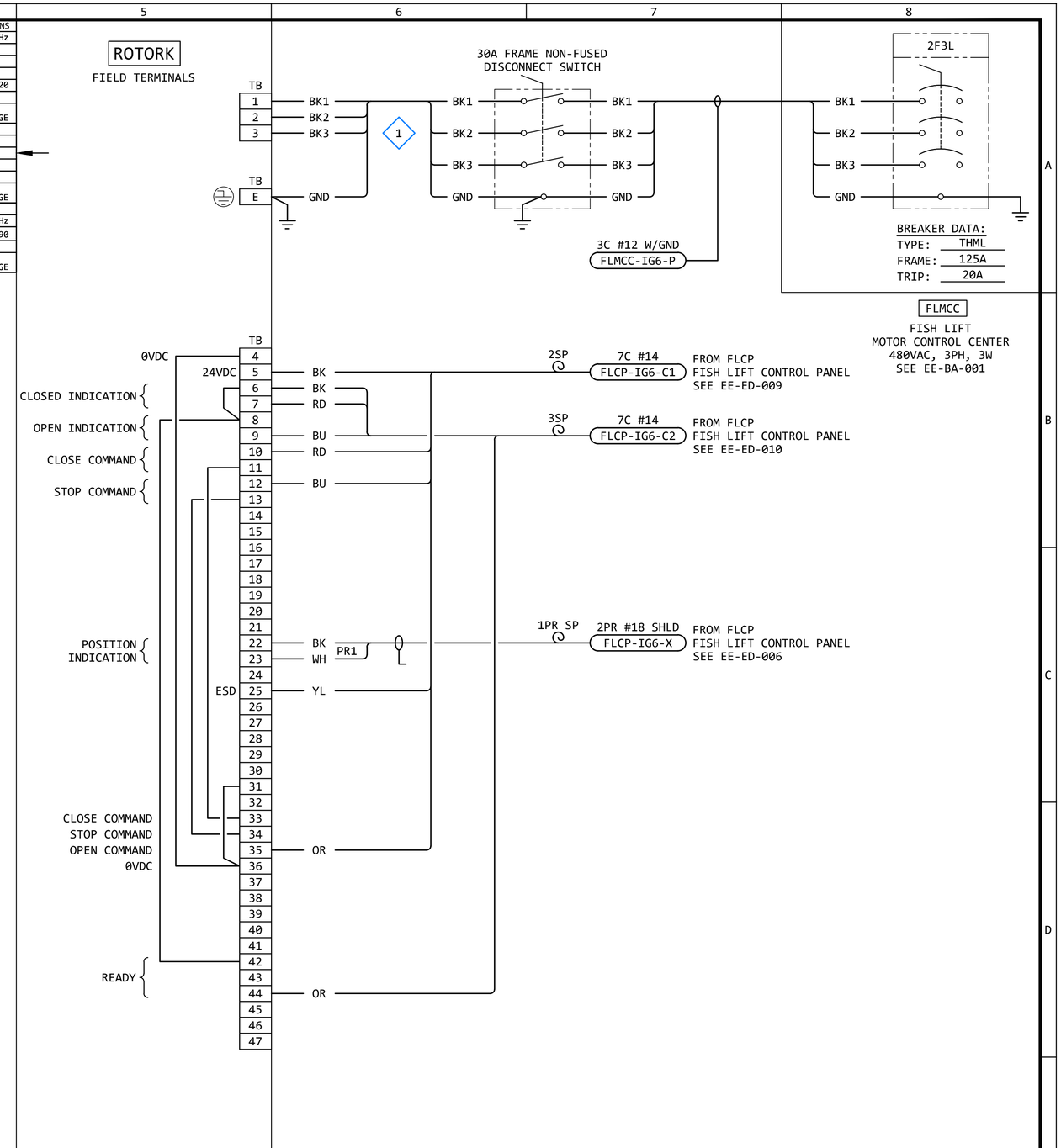

GENERAL NOTES:

1. THE DESIGN SHOWN IS BASED ON ROTORK CIRCUIT DIAGRAM No. 101B0000, ISSUE 6, DATED 160614. SEE EE-DK-001 FOR MORE DETAILS.
2. TERMINAL NUMBERS ARE SUBJECT TO CHANGE. REFER TO CIRCUIT DIAGRAMS SUPPLIED WITH EQUIPMENT.

KEYED NOTES:

1. THE CABLES ON THE LOAD SIDE OF THE DISCONNECT SWITCH SHALL MATCH THE LINE SIDE CABLES.

REVISION

REV	DATE	DR	CK	AP	DESCRIPTION
0	03/28/2025	SAM	CMM	CMH	ISSUED FOR CONSTRUCTION

ECI "Engineering with Distinction" ELECTRICAL CONSULTANTS, INC.

THIS DRAWING IS THE PROPERTY OF ELECTRICAL CONSULTANTS, INC. AND IS TO BE USED ONLY FOR THE SPECIFIC PROJECT IDENTIFIED ON THE DRAWING. NO REVISIONS SHALL BE MADE WITHOUT THE EXPRESSED WRITTEN CONSENT OF ELECTRICAL CONSULTANTS, INC.

DRAWN BY SAM	DATE 08/22/2024	WOODLAND PULP, LLC WOODLAND FISH LIFT PASSAGE	
CHECKED BY CMM	DATE 08/22/2024	INTERCONNECTION DIAGRAM EXIT FLUME ISOLATION GATE (IG6)	
APPROVED BY CMH	DATE 08/22/2024	TECHNOLOGY HYDRO	DRAWING CATEGORY INTERCONNECTS
SCALE NONE		PROJECT NO. ARL-007 / DWG EE-GK-006	REV 0

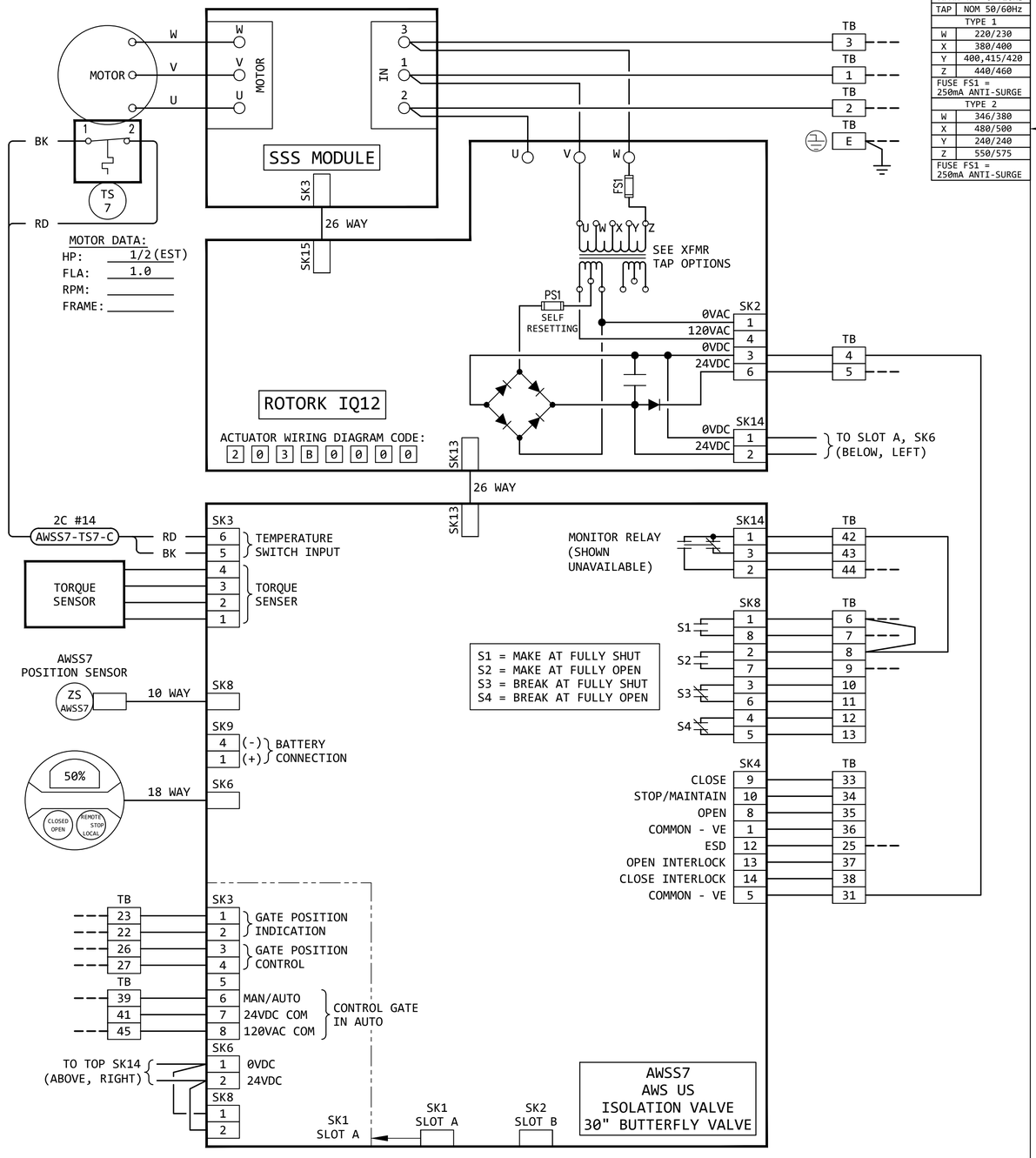

XFMR TAP OPTIONS	
TAP	NOM 50/60Hz
TYPE 1	
W	220/230
X	380/400
Y	400,415/420
Z	440/460
FUSE FS1 = 250mA ANTI-SURGE	
TYPE 2	
W	346/380
X	480/500
Y	240/240
Z	550/575
FUSE FS1 = 250mA ANTI-SURGE	

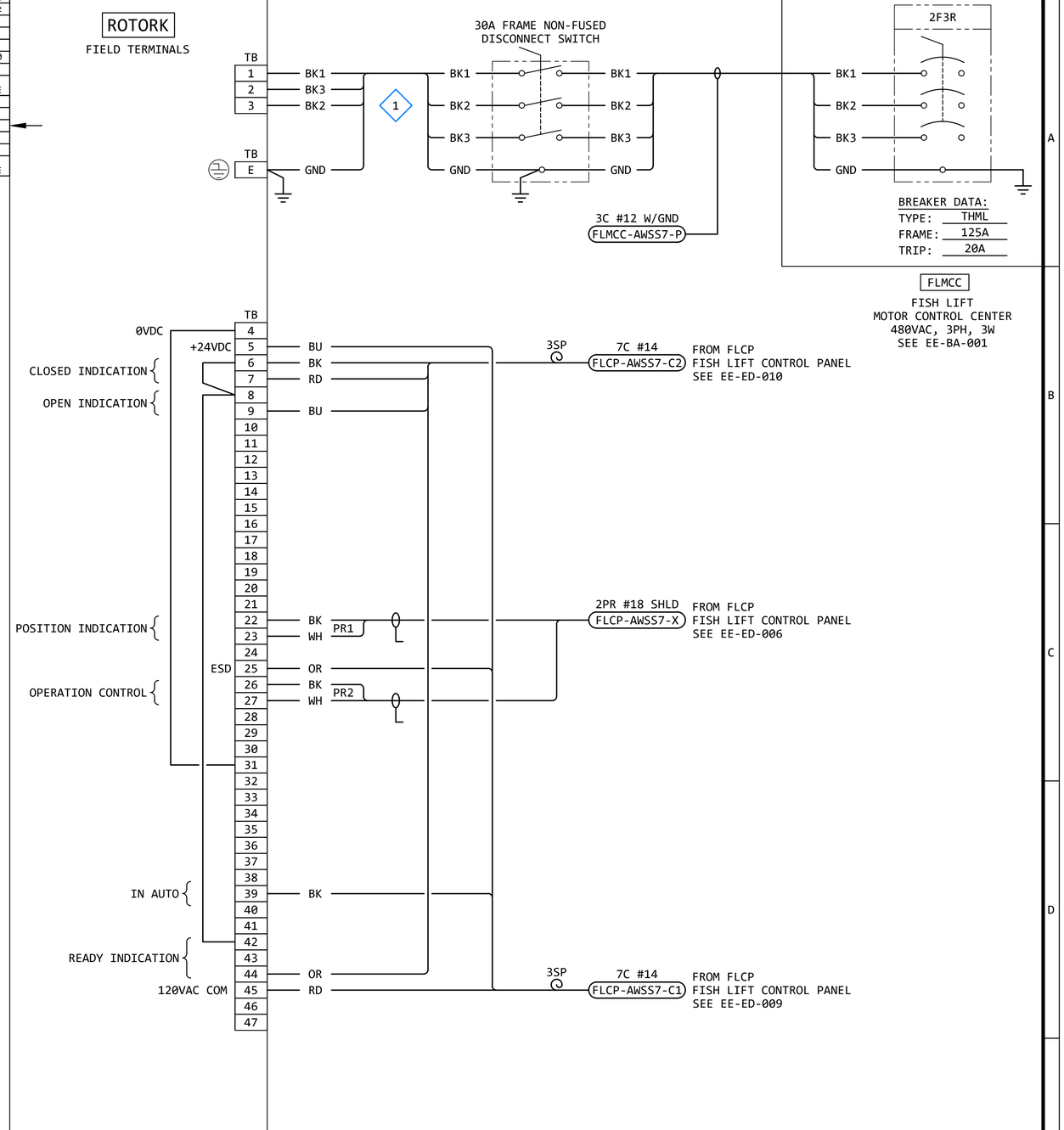

GENERAL NOTES:

1. THE DESIGN SHOWN IS BASED ON ROTORK CIRCUIT DIAGRAM No. 203B0000, ISSUE 6, DATED 290520. SEE EE-DK-002 FOR MORE DETAILS.
2. TERMINAL NUMBERS ARE SUBJECT TO CHANGE. REFER TO CIRCUIT DIAGRAMS SUPPLIED WITH EQUIPMENT.

KEYED NOTES:

1. THE CABLES ON THE LOAD SIDE OF THE DISCONNECT SWITCH SHALL MATCH THE LINE SIDE CABLES.

REVISION

REV	DATE	DR	CK	AP	DESCRIPTION
0	03/28/2025	SAM	CMM	CMH	ISSUED FOR CONSTRUCTION

ECI "Engineering with Distinction"
ELECTRICAL CONSULTANTS, INC.

THIS DRAWING IS THE PROPERTY OF ELECTRICAL CONSULTANTS, INC. AND IS TO BE USED ONLY FOR THE SPECIFIC PROJECT IDENTIFIED ON THE DRAWING. NO REVISIONS SHALL BE MADE WITHOUT THE EXPRESSED WRITTEN CONSENT OF ELECTRICAL CONSULTANTS, INC.

DRAWN BY: SAM	DATE: 08/22/2024	WOODLAND PULP, LLC WOODLAND FISH LIFT PASSAGE
CHECKED BY: CMM	DATE: 08/22/2024	INTERCONNECTION DIAGRAM AWS US ISOLATION VALVE (AWSS7)
APPROVED BY: CMH	DATE: 08/22/2024	TECHNOLOGY: HYDRO / DRAWING CATEGORY: INTERCONNECTS
SCALE: NONE	PROJECT NO.: ARL-007	DWG: EE-GK-007 / REV: 0

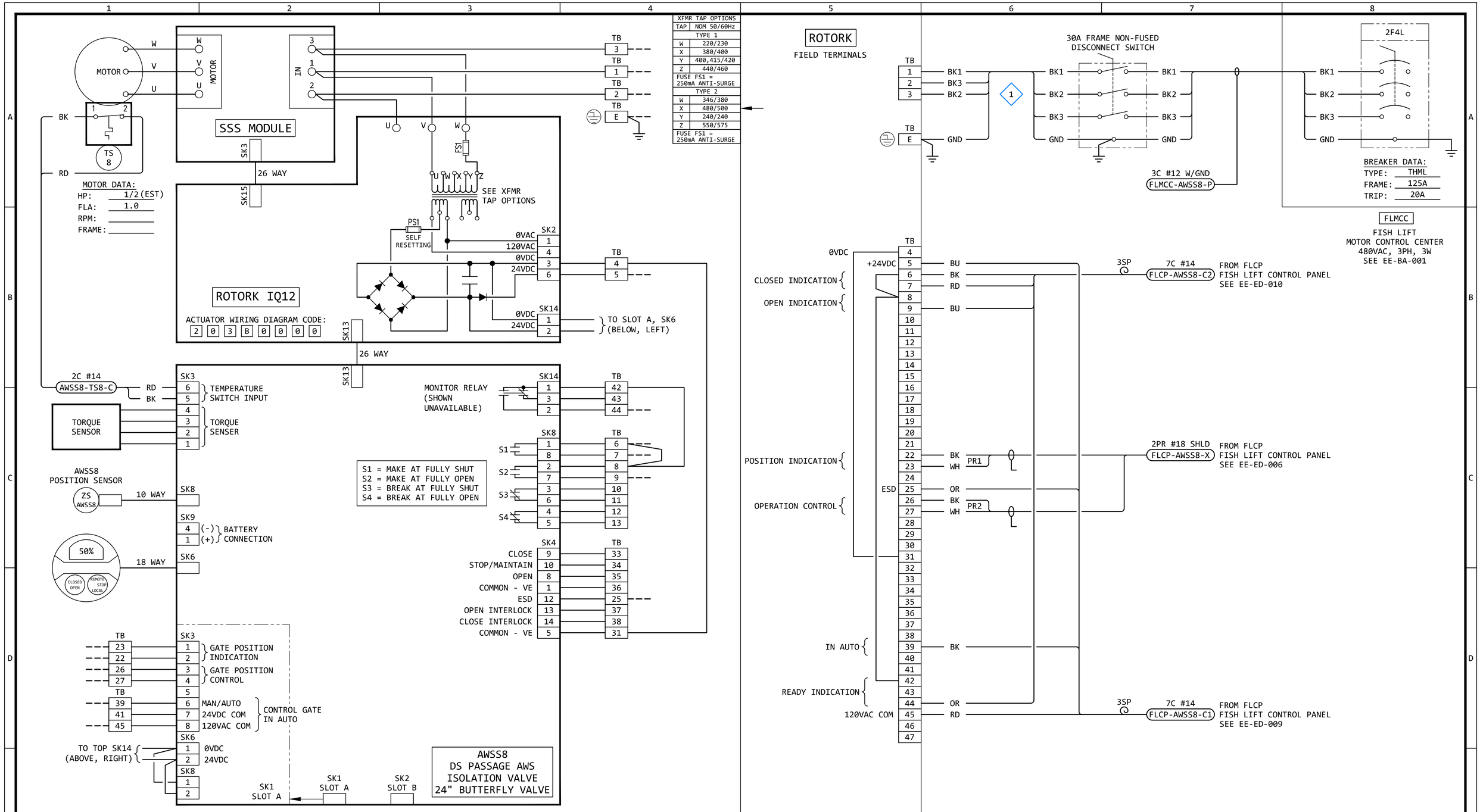

GENERAL NOTES:

1. THE DESIGN SHOWN IS BASED ON ROTORK CIRCUIT DIAGRAM No. 203B0000, ISSUE 6, DATED 290520. SEE EE-DK-002 FOR MORE DETAILS.
2. TERMINAL NUMBERS ARE SUBJECT TO CHANGE. REFER TO CIRCUIT DIAGRAMS SUPPLIED WITH EQUIPMENT.

KEYED NOTES:

1. THE CABLES ON THE LOAD SIDE OF THE DISCONNECT SWITCH SHALL MATCH THE LINE SIDE CABLES.

REVISION

REV	DATE	DR	CK	AP	DESCRIPTION
0	03/28/2025	SAM	CMM	CMH	ISSUED FOR CONSTRUCTION

ECI "Engineering with Distinction" ELECTRICAL CONSULTANTS, INC.

THIS DRAWING IS THE PROPERTY OF ELECTRICAL CONSULTANTS, INC. AND IS TO BE USED ONLY FOR THE SPECIFIC PROJECT IDENTIFIED ON THE DRAWING. NO REVISIONS SHALL BE MADE WITHOUT THE EXPRESSED WRITTEN CONSENT OF ELECTRICAL CONSULTANTS, INC.

DRAWN BY: SAM	DATE: 08/22/2024	WOODLAND PULP, LLC WOODLAND FISH LIFT PASSAGE
CHECKED BY: CMM	DATE: 08/22/2024	INTERCONNECTION DIAGRAM DS PASSAGE AWS ISOLATION VALVE (AWSS8)
APPROVED BY: CMH	DATE: 08/22/2024	TECHNOLOGY: HYDRO / DRAWING CATEGORY: INTERCONNECTS
SCALE: NONE	PROJECT NO.: ARL-007	DWG: EE-GK-008 / REV: 0

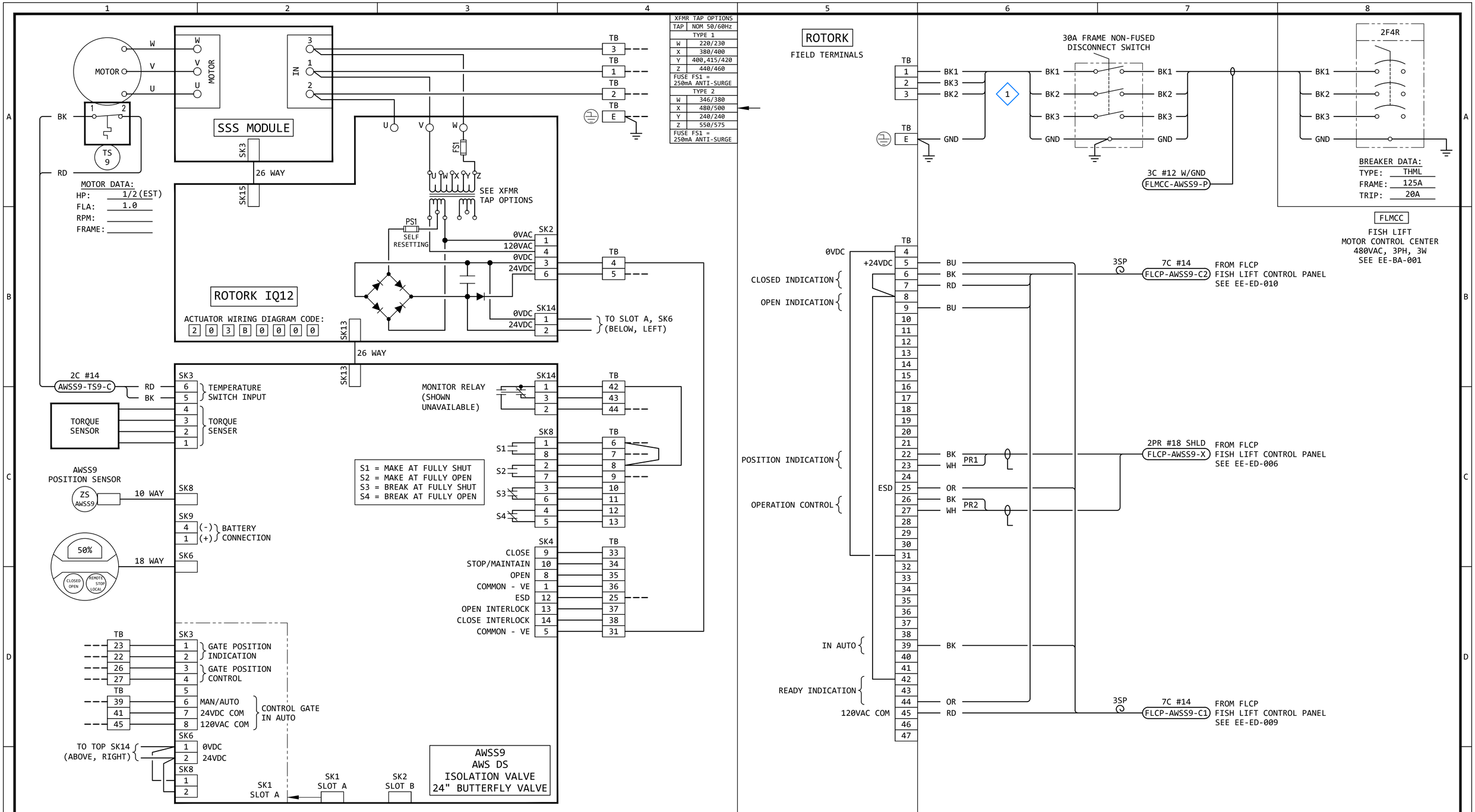

GENERAL NOTES:

1. THE DESIGN SHOWN IS BASED ON ROTORK CIRCUIT DIAGRAM No. 203B0000, ISSUE 6, DATED 290520. SEE EE-DK-002 FOR MORE DETAILS.
2. TERMINAL NUMBERS ARE SUBJECT TO CHANGE. REFER TO CIRCUIT DIAGRAMS SUPPLIED WITH EQUIPMENT.

KEYED NOTES:

1. THE CABLES ON THE LOAD SIDE OF THE DISCONNECT SWITCH SHALL MATCH THE LINE SIDE CABLES.

REVISION

REV	DATE	DR	CK	AP	DESCRIPTION
0	03/28/2025	SAM	CMM	CMH	ISSUED FOR CONSTRUCTION

ECI "Engineering with Distinction" ELECTRICAL CONSULTANTS, INC.

THIS DRAWING IS THE PROPERTY OF ELECTRICAL CONSULTANTS, INC. AND IS TO BE USED ONLY FOR THE SPECIFIC PROJECT IDENTIFIED ON THE DRAWING. NO REVISIONS SHALL BE MADE WITHOUT THE EXPRESSED WRITTEN CONSENT OF ELECTRICAL CONSULTANTS, INC.

DRAWN BY: SAM	DATE: 08/22/2024	WOODLAND PULP, LLC WOODLAND FISH LIFT PASSAGE
CHECKED BY: CMM	DATE: 08/22/2024	INTERCONNECTION DIAGRAM AWS DS ISOLATION VALVE (AWSS9)
APPROVED BY: CMH	DATE: 08/22/2024	TECHNOLOGY: HYDRO / DRAWING CATEGORY: INTERCONNECTS
SCALE: NONE	PROJECT NO.: ARL-007	DWG: EE-GK-009 / REV: 0

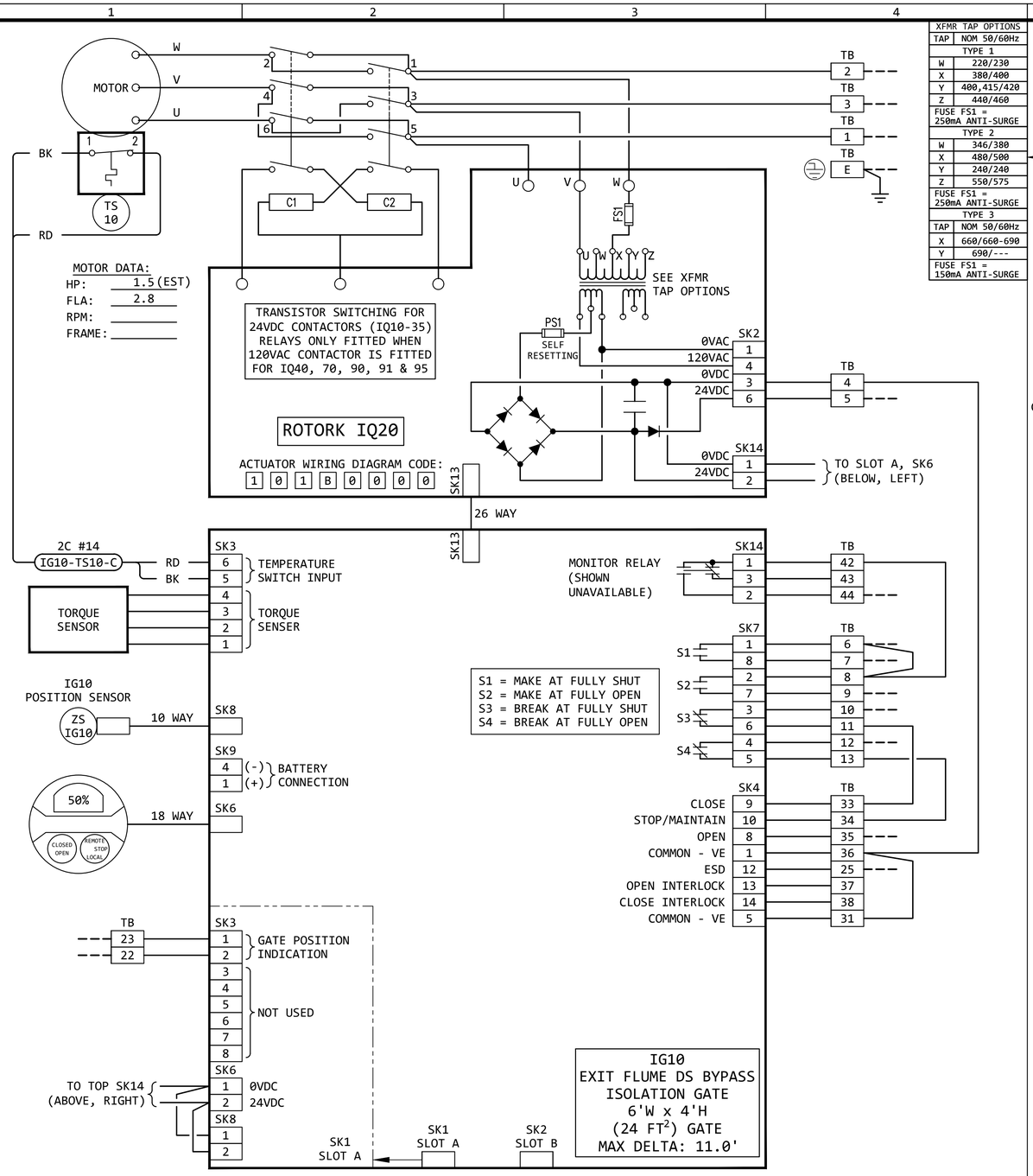

XFMR TAP OPTIONS	
TAP	NOM 50/60Hz
TYPE 1	
W	220/230
X	380/400
Y	400,415/420
Z	440/460
FUSE FS1 = 250mA ANTI-SURGE	
TYPE 2	
W	346/380
X	480/500
Y	240/240
Z	550/575
FUSE FS1 = 250mA ANTI-SURGE	
TYPE 3	
TAP	NOM 50/60Hz
X	660/660-690
Y	690/---
FUSE FS1 = 150mA ANTI-SURGE	

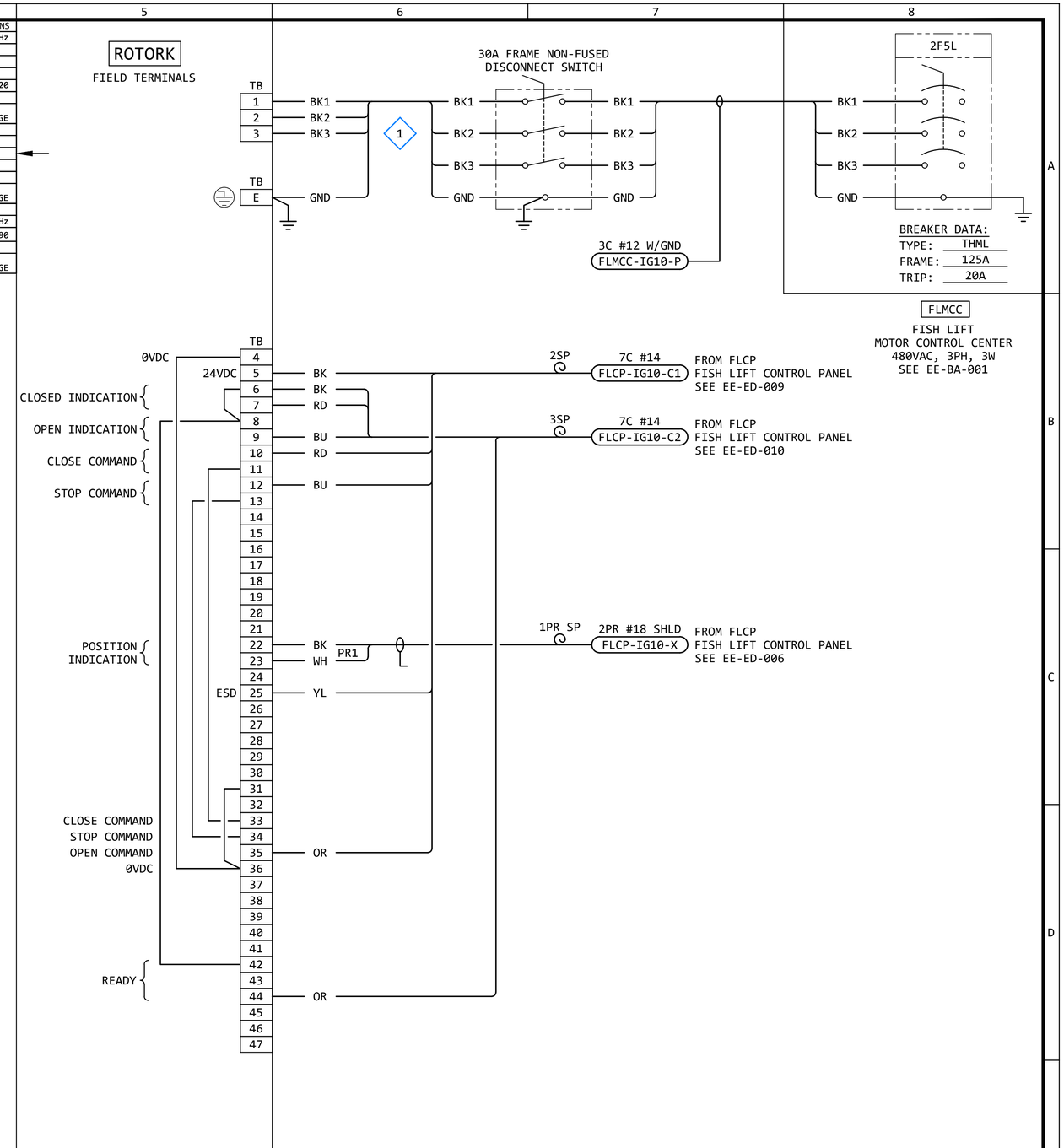

GENERAL NOTES:

1. THE DESIGN SHOWN IS BASED ON ROTORK CIRCUIT DIAGRAM No. 101B0000, ISSUE 6, DATED 160614. SEE EE-DK-001 FOR MORE DETAILS.
2. TERMINAL NUMBERS ARE SUBJECT TO CHANGE. REFER TO CIRCUIT DIAGRAMS SUPPLIED WITH EQUIPMENT.

KEYED NOTES:

1. THE CABLES ON THE LOAD SIDE OF THE DISCONNECT SWITCH SHALL MATCH THE LINE SIDE CABLES.

REVISION

REV	DATE	DR	CK	AP	DESCRIPTION
0	03/28/2025	SAM	CMM	CMH	ISSUED FOR CONSTRUCTION

ECI "Engineering with Distinction" ELECTRICAL CONSULTANTS, INC.

THIS DRAWING IS THE PROPERTY OF ELECTRICAL CONSULTANTS, INC. AND IS TO BE USED ONLY FOR THE SPECIFIC PROJECT IDENTIFIED ON THE DRAWING. NO REVISIONS SHALL BE MADE WITHOUT THE EXPRESSED WRITTEN CONSENT OF ELECTRICAL CONSULTANTS, INC.

DRAWN BY SAM	DATE 08/22/2024	WOODLAND PULP, LLC WOODLAND FISH LIFT PASSAGE
CHECKED BY CMM	DATE 08/22/2024	INTERCONNECTION DIAGRAM EXIT FLUME DS BYPASS ISOLATION GATE (IG10)
APPROVED BY CMH	DATE 08/22/2024	TECHNOLOGY: HYDRO / DRAWING CATEGORY: INTERCONNECTS
SCALE: NONE	PROJECT NO. ARL-007	DWG: EE-GK-010 / REV: 0

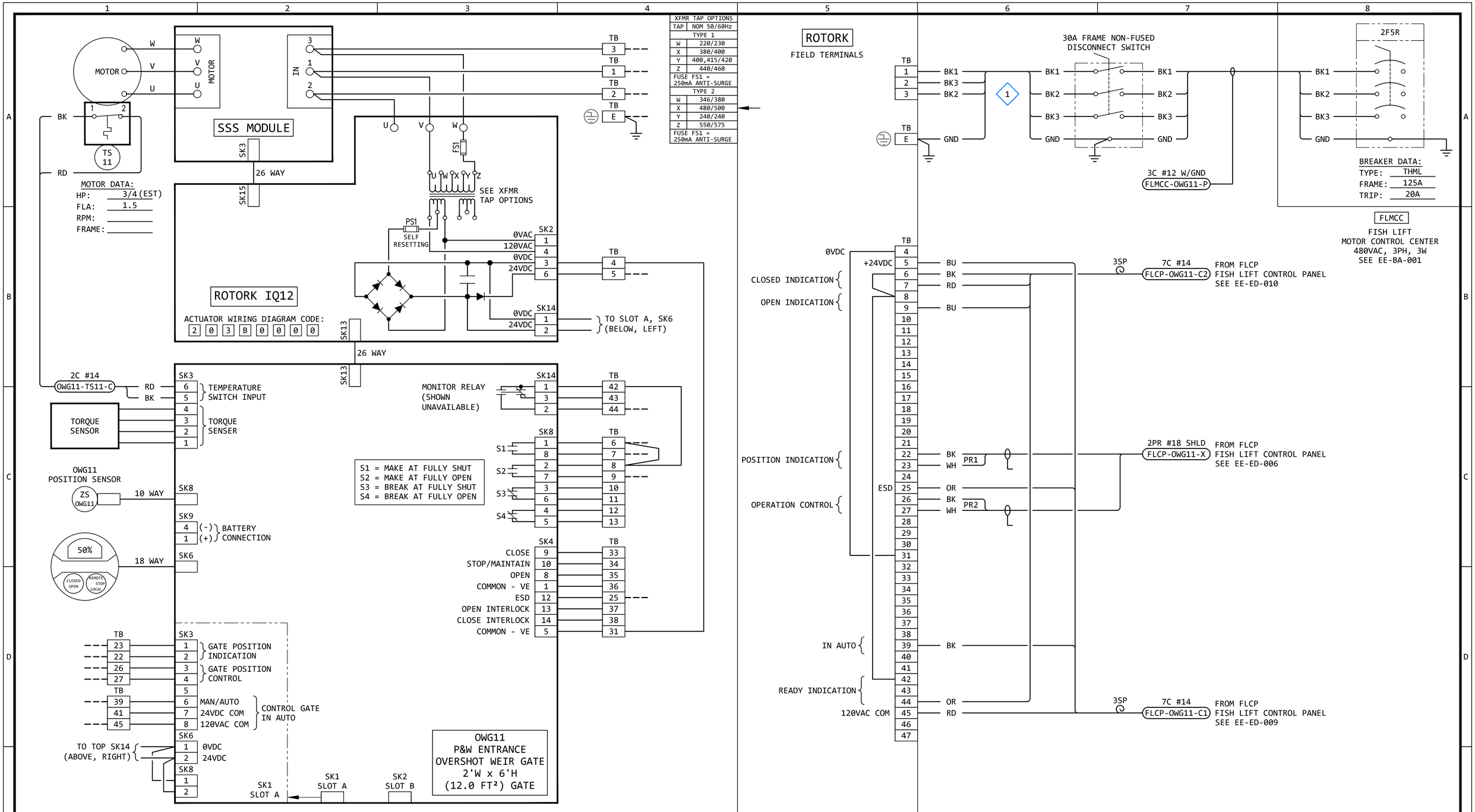

GENERAL NOTES:

1. THE DESIGN SHOWN IS BASED ON ROTORK CIRCUIT DIAGRAM No. 203B0000, ISSUE 6, DATED 290520. SEE EE-DK-002 FOR MORE DETAILS.
2. TERMINAL NUMBERS ARE SUBJECT TO CHANGE. REFER TO CIRCUIT DIAGRAMS SUPPLIED WITH EQUIPMENT.

KEYED NOTES:

1. THE CABLES ON THE LOAD SIDE OF THE DISCONNECT SWITCH SHALL MATCH THE LINE SIDE CABLES.

REVISION

REV	DATE	DR	CK	AP	DESCRIPTION
0	03/28/2025	SAM	CMM	CMH	ISSUED FOR CONSTRUCTION

ECI "Engineering with Distinction" ELECTRICAL CONSULTANTS, INC.

THIS DRAWING IS THE PROPERTY OF ELECTRICAL CONSULTANTS, INC. AND IS TO BE USED ONLY FOR THE SPECIFIC PROJECT IDENTIFIED ON THE DRAWING. NO REVISIONS SHALL BE MADE WITHOUT THE EXPRESSED WRITTEN CONSENT OF ELECTRICAL CONSULTANTS, INC.

DRAWN BY: SAM	DATE: 08/22/2024	WOODLAND PULP, LLC WOODLAND FISH LIFT PASSAGE
CHECKED BY: CMM	DATE: 08/22/2024	INTERCONNECTION DIAGRAM P&W ENTRANCE OVERSHOT WEIR GATE (OWG11)
APPROVED BY: CMH	DATE: 08/22/2024	TECHNOLOGY: HYDRO / DRAWING CATEGORY: INTERCONNECTS
SCALE: NONE	PROJECT NO.: ARL-007	DWG: EE-GK-011 / REV: 0

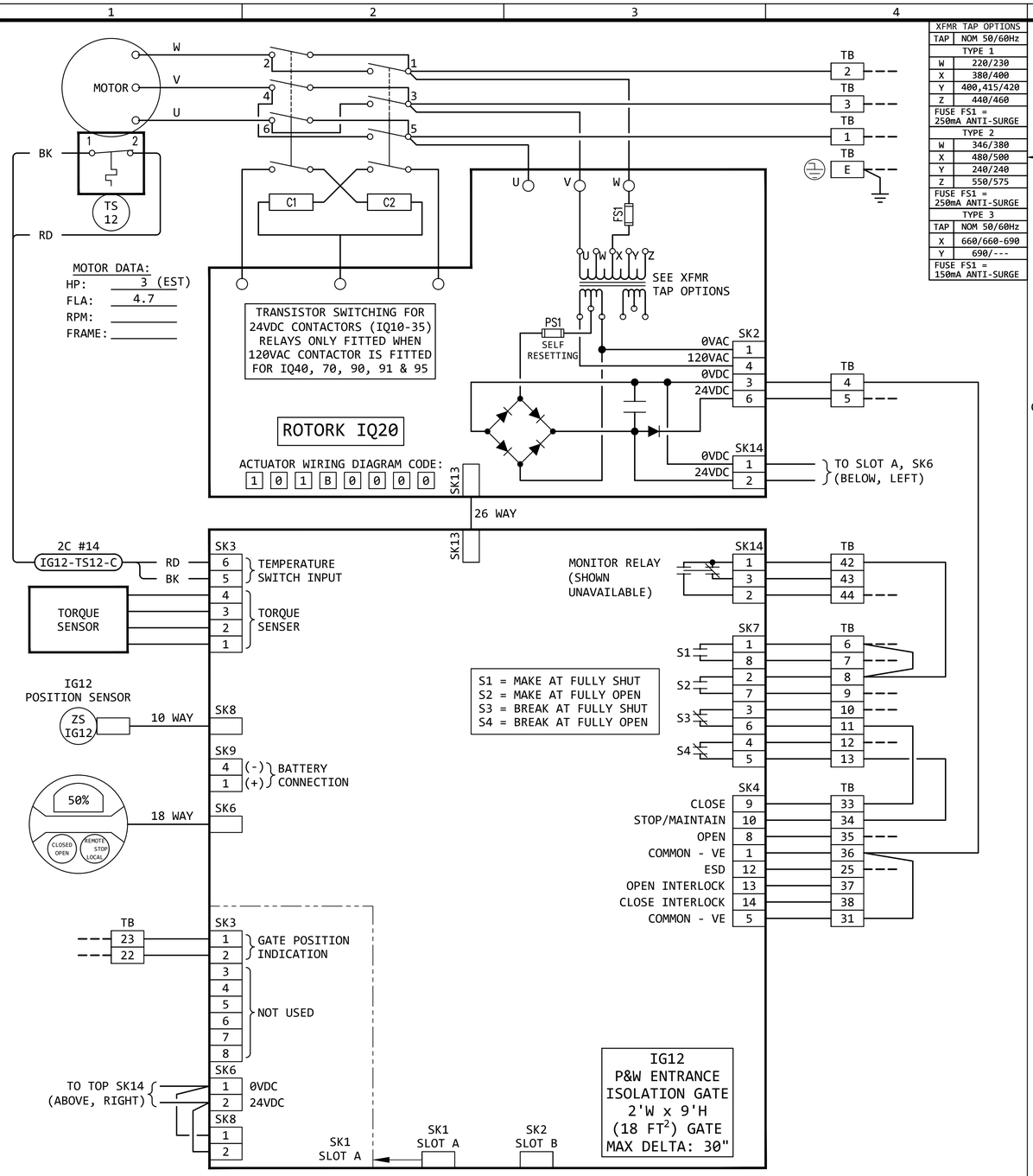

XFMR TAP OPTIONS	
TAP	NOM 50/60Hz
TYPE 1	
W	220/230
X	380/400
Y	400,415/420
Z	440/460
FUSE FS1 = 250mA ANTI-SURGE	
TYPE 2	
W	346/380
X	480/500
Y	240/240
Z	550/575
FUSE FS1 = 250mA ANTI-SURGE	
TYPE 3	
TAP	NOM 50/60Hz
X	660/660-690
Y	690/---
FUSE FS1 = 150mA ANTI-SURGE	

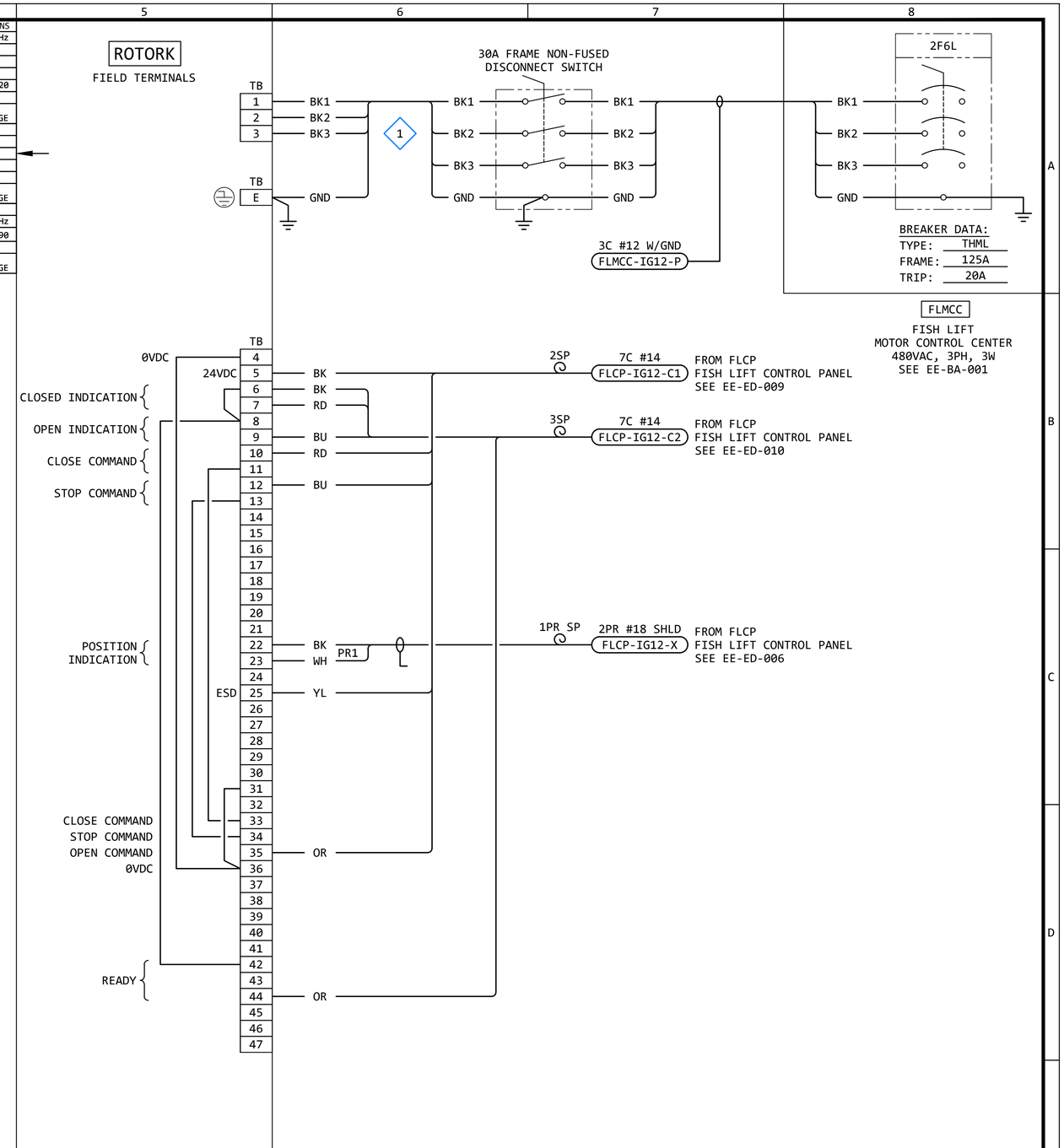

GENERAL NOTES:

1. THE DESIGN SHOWN IS BASED ON ROTORK CIRCUIT DIAGRAM No. 101B0000, ISSUE 6, DATED 160614. SEE EE-DK-001 FOR MORE DETAILS.
2. TERMINAL NUMBERS ARE SUBJECT TO CHANGE. REFER TO CIRCUIT DIAGRAMS SUPPLIED WITH EQUIPMENT.

KEYED NOTES:

1. THE CABLES ON THE LOAD SIDE OF THE DISCONNECT SWITCH SHALL MATCH THE LINE SIDE CABLES.

REVISION

REV	DATE	DR	CK	AP	DESCRIPTION
0	03/28/2025	SAM	CMM	CMH	ISSUED FOR CONSTRUCTION

ECI "Engineering with Distinction" ELECTRICAL CONSULTANTS, INC.

THIS DRAWING IS THE PROPERTY OF ELECTRICAL CONSULTANTS, INC. AND IS TO BE USED ONLY FOR THE SPECIFIC PROJECT IDENTIFIED ON THE DRAWING. NO REVISIONS SHALL BE MADE WITHOUT THE EXPRESSED WRITTEN CONSENT OF ELECTRICAL CONSULTANTS, INC.

DRAWN BY SAM	DATE 08/22/2024	WOODLAND PULP, LLC WOODLAND FISH LIFT PASSAGE	
CHECKED BY CMM	DATE 08/22/2024	INTERCONNECTION DIAGRAM P&W ENTRANCE ISOLATION GATE (IG12)	
APPROVED BY CMH	DATE 08/22/2024	TECHNOLOGY HYDRO	DRAWING CATEGORY INTERCONNECTS
SCALE NONE		PROJECT NO. ARL-007 / DWG EE-GK-012	REV 0

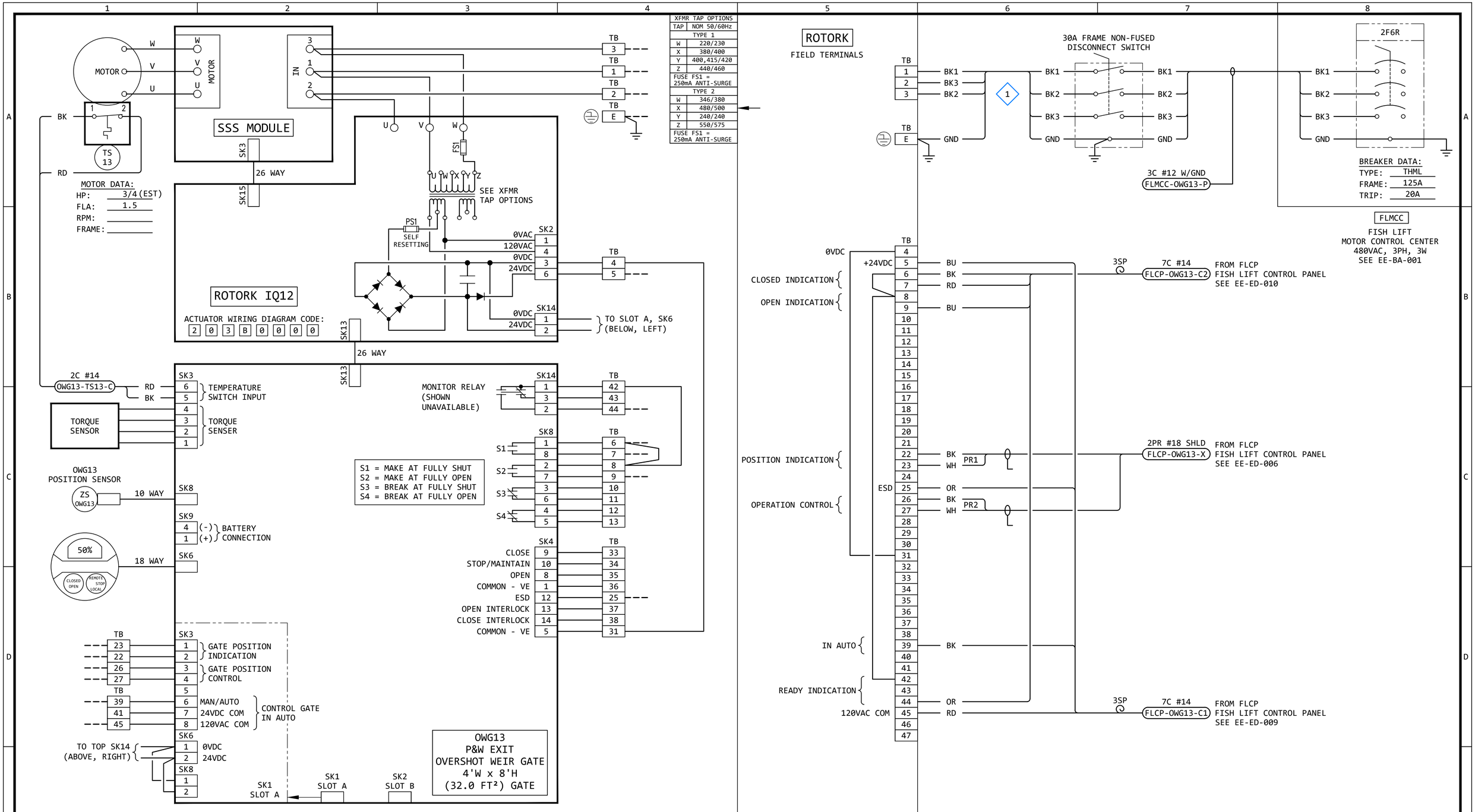

GENERAL NOTES:

1. THE DESIGN SHOWN IS BASED ON ROTORK CIRCUIT DIAGRAM No. 203B0000, ISSUE 6, DATED 290520. SEE EE-DK-002 FOR MORE DETAILS.
2. TERMINAL NUMBERS ARE SUBJECT TO CHANGE. REFER TO CIRCUIT DIAGRAMS SUPPLIED WITH EQUIPMENT.

KEYED NOTES:

1. THE CABLES ON THE LOAD SIDE OF THE DISCONNECT SWITCH SHALL MATCH THE LINE SIDE CABLES.

REVISION

REV	DATE	DR	CK	AP	DESCRIPTION
0	03/28/2025	SAM	CMM	CMH	ISSUED FOR CONSTRUCTION

ECI "Engineering with Distinction" ELECTRICAL CONSULTANTS, INC.

THIS DRAWING IS THE PROPERTY OF ELECTRICAL CONSULTANTS, INC. AND IS TO BE USED ONLY FOR THE SPECIFIC PROJECT IDENTIFIED ON THE DRAWING. NO REVISIONS SHALL BE MADE WITHOUT THE EXPRESSED WRITTEN CONSENT OF ELECTRICAL CONSULTANTS, INC.

DRAWN BY: SAM	DATE: 08/22/2024	WOODLAND PULP, LLC WOODLAND FISH LIFT PASSAGE
CHECKED BY: CMM	DATE: 08/22/2024	INTERCONNECTION DIAGRAM P&W EXIT OVERSHOT WEIR GATE (OWG13)
APPROVED BY: CMH	DATE: 08/22/2024	TECHNOLOGY: HYDRO / DRAWING CATEGORY: INTERCONNECTS
SCALE: NONE	PROJECT NO.: ARL-007	DWG: EE-GK-013 / REV: 0

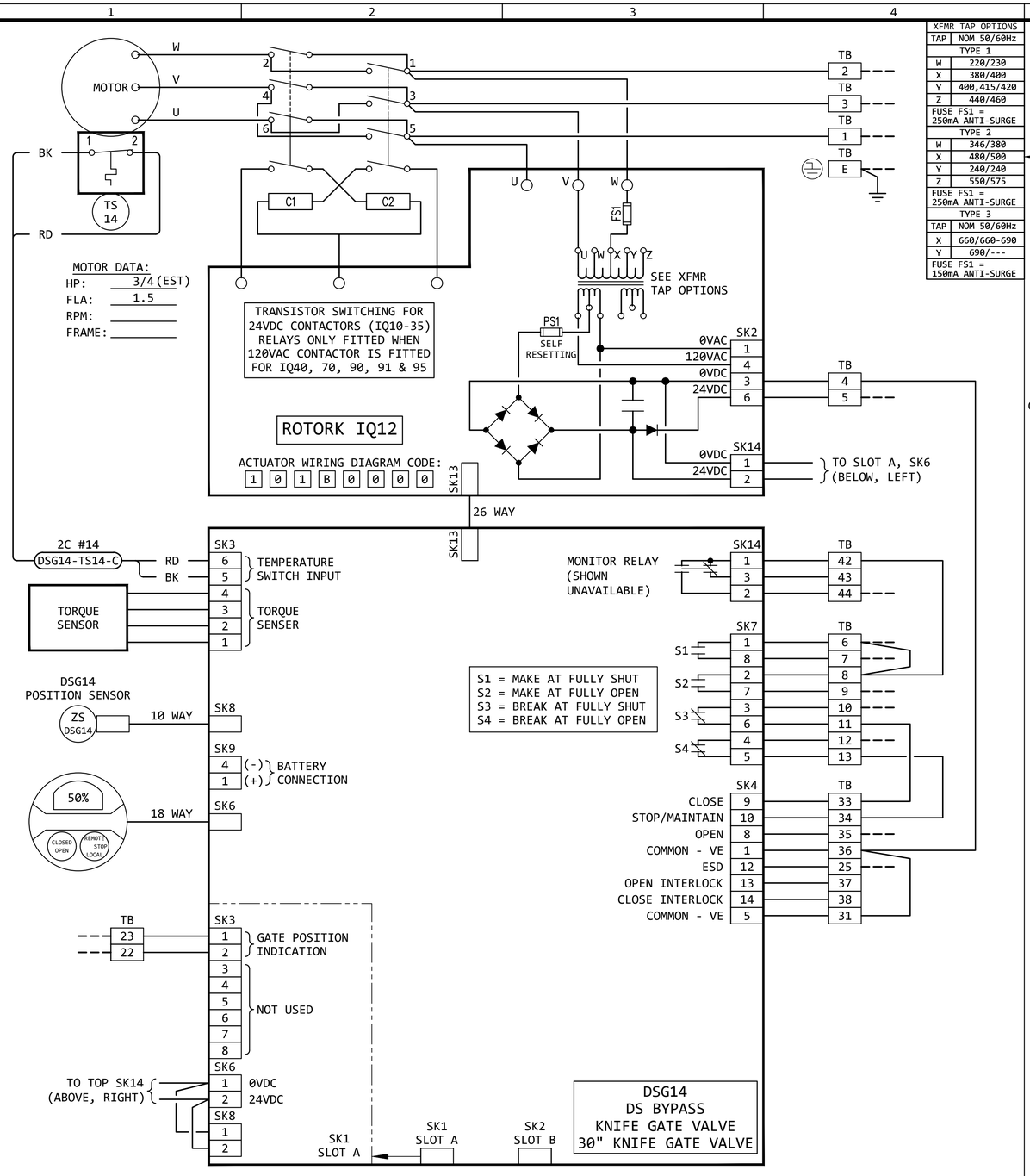

XFMR TAP OPTIONS	
TAP	NOM 50/60Hz
TYPE 1	
W	220/230
X	380/400
Y	400,415/420
Z	440/460
FUSE FS1 = 250mA ANTI-SURGE	
TYPE 2	
W	346/380
X	480/500
Y	240/240
Z	550/575
FUSE FS1 = 250mA ANTI-SURGE	
TYPE 3	
TAP	NOM 50/60Hz
X	660/660-690
Y	690/---
FUSE FS1 = 150mA ANTI-SURGE	

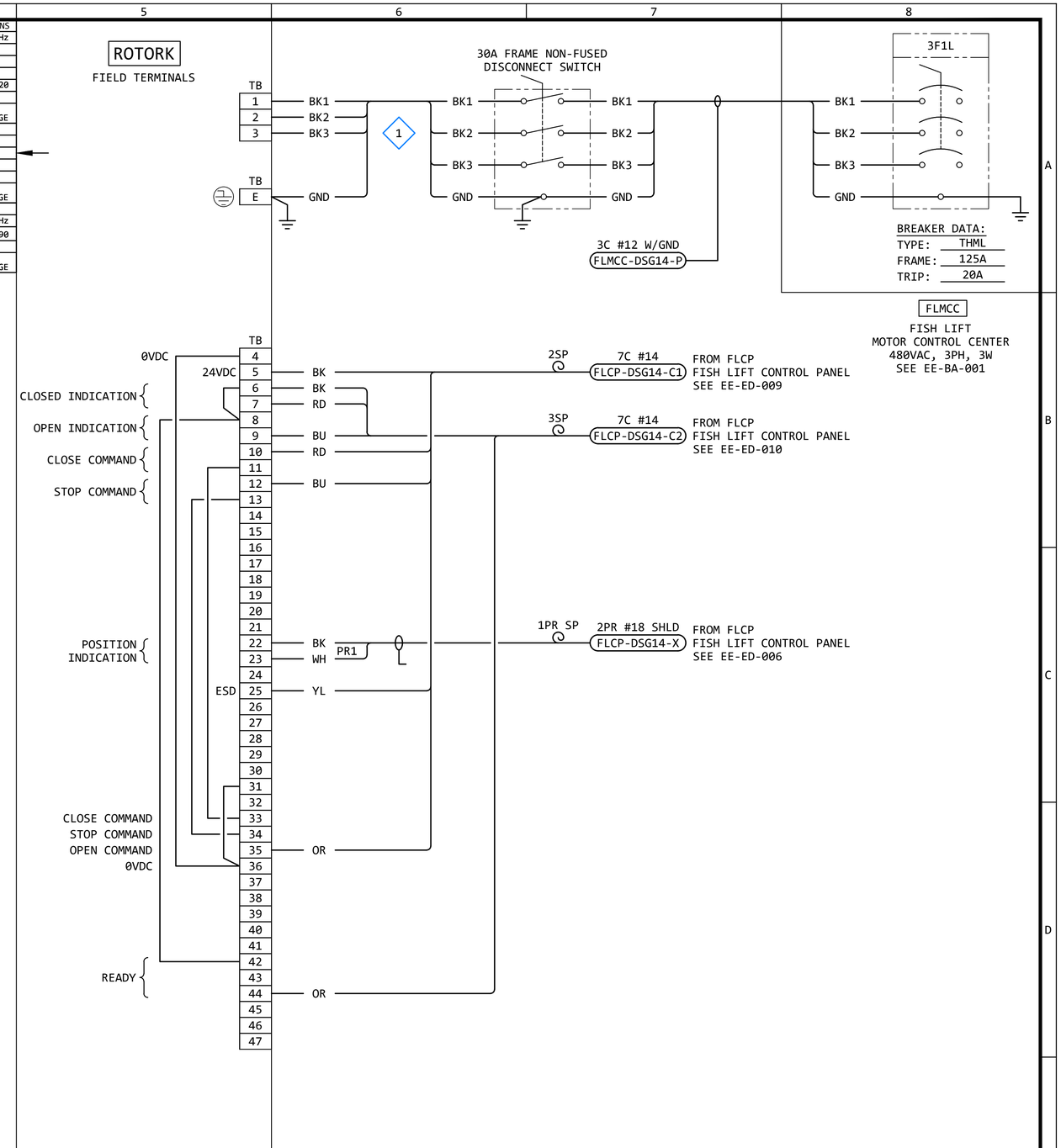

GENERAL NOTES:

1. THE DESIGN SHOWN IS BASED ON ROTORK CIRCUIT DIAGRAM No. 101B0000, ISSUE 6, DATED 160614. SEE EE-DK-001 FOR MORE DETAILS.
2. TERMINAL NUMBERS ARE SUBJECT TO CHANGE. REFER TO CIRCUIT DIAGRAMS SUPPLIED WITH EQUIPMENT.

KEYED NOTES:

1. THE CABLES ON THE LOAD SIDE OF THE DISCONNECT SWITCH SHALL MATCH THE LINE SIDE CABLES.

REVISION

REV	DATE	DR	CK	AP	DESCRIPTION
0	03/28/2025	SAM	CMM	CMH	ISSUED FOR CONSTRUCTION

ECI "Engineering with Distinction" ELECTRICAL CONSULTANTS, INC.

THIS DRAWING IS THE PROPERTY OF ELECTRICAL CONSULTANTS, INC. AND IS TO BE USED ONLY FOR THE SPECIFIC PROJECT IDENTIFIED ON THE DRAWING. NO REVISIONS SHALL BE MADE WITHOUT THE EXPRESSED WRITTEN CONSENT OF ELECTRICAL CONSULTANTS, INC.

DRAWN BY SAM	DATE 08/22/2024	WOODLAND PULP, LLC WOODLAND FISH LIFT PASSAGE	
CHECKED BY CMM	DATE 08/22/2024	INTERCONNECTION DIAGRAM DS BYPASS KNIFE GATE VALVE (DSG14)	
APPROVED BY CMH	DATE 08/22/2024	TECHNOLOGY HYDRO	DRAWING CATEGORY INTERCONNECTS
SCALE NONE		PROJECT NO. ARL-007 / DWG EE-GK-014	REV 0

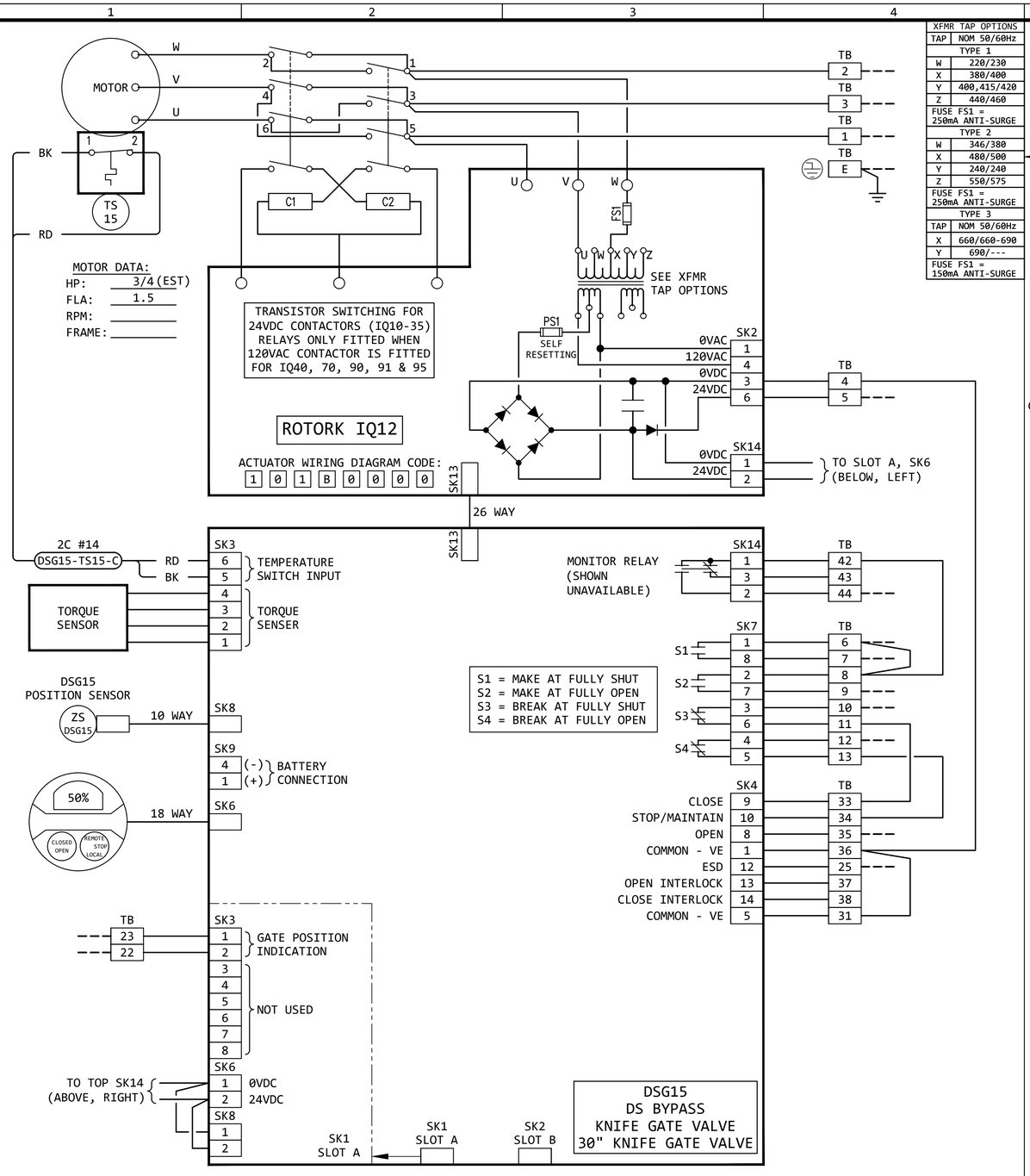

XFMR TAP OPTIONS	
TAP	NOM 50/60Hz
TYPE 1	
W	220/230
X	380/400
Y	400,415/420
Z	440/460
FUSE FS1 = 250mA ANTI-SURGE	
TYPE 2	
W	346/380
X	480/500
Y	240/240
Z	550/575
FUSE FS1 = 250mA ANTI-SURGE	
TYPE 3	
TAP	NOM 50/60Hz
X	660/660-690
Y	690/---
FUSE FS1 = 150mA ANTI-SURGE	

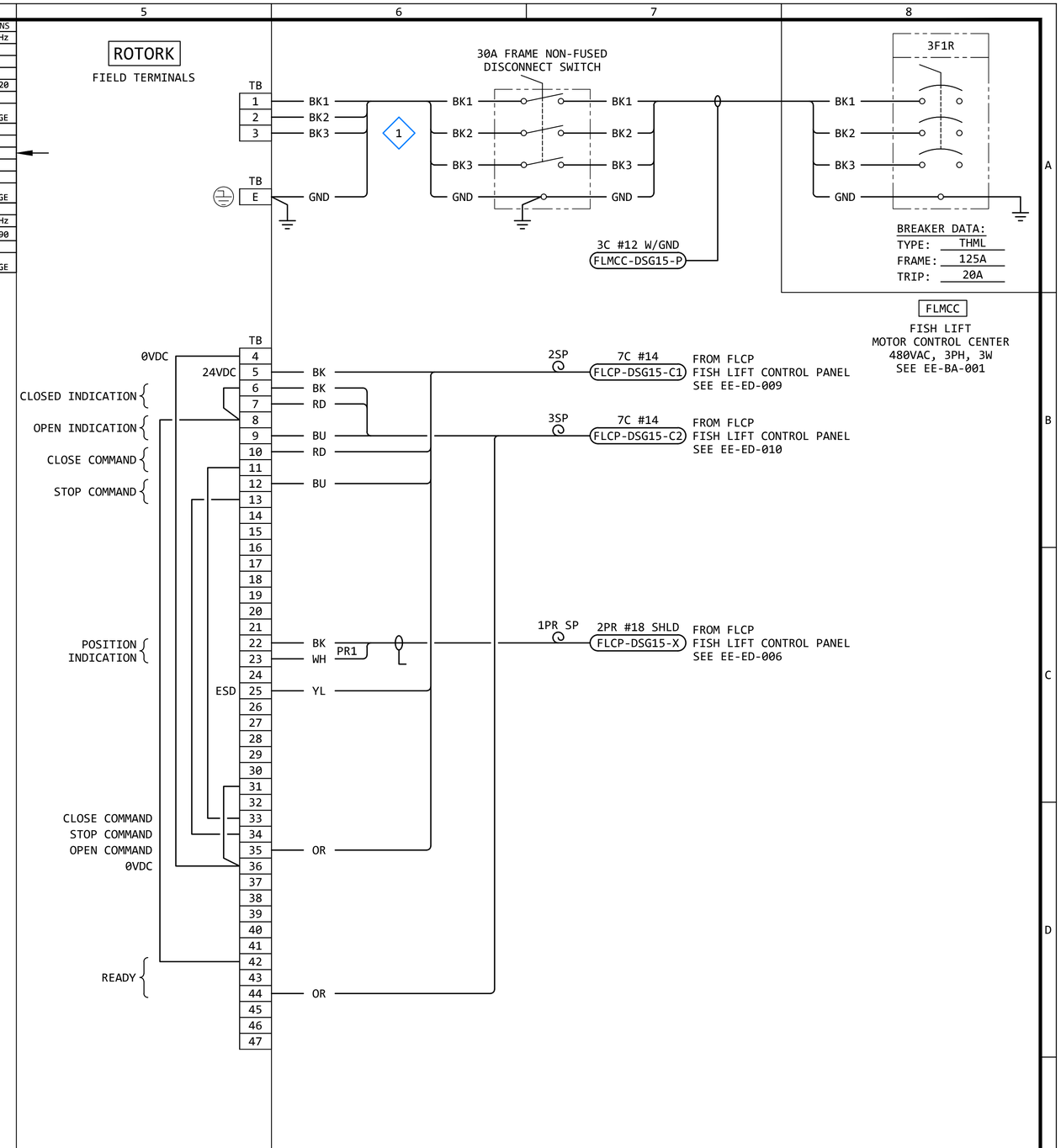

GENERAL NOTES:

1. THE DESIGN SHOWN IS BASED ON ROTORK CIRCUIT DIAGRAM No. 101B0000, ISSUE 6, DATED 160614. SEE EE-DK-001 FOR MORE DETAILS.
2. TERMINAL NUMBERS ARE SUBJECT TO CHANGE. REFER TO CIRCUIT DIAGRAMS SUPPLIED WITH EQUIPMENT.

KEYED NOTES:

1. THE CABLES ON THE LOAD SIDE OF THE DISCONNECT SWITCH SHALL MATCH THE LINE SIDE CABLES.

REVISION

REV	DATE	DR	CK	AP	DESCRIPTION
0	03/28/2025	SAM	CMM	CMH	ISSUED FOR CONSTRUCTION

ECI "Engineering with Distinction" ELECTRICAL CONSULTANTS, INC.

THIS DRAWING IS THE PROPERTY OF ELECTRICAL CONSULTANTS, INC. AND IS TO BE USED ONLY FOR THE SPECIFIC PROJECT IDENTIFIED ON THE DRAWING. NO REVISIONS SHALL BE MADE WITHOUT THE EXPRESSED WRITTEN CONSENT OF ELECTRICAL CONSULTANTS, INC.

DRAWN BY SAM	DATE 08/22/2024	WOODLAND PULP, LLC WOODLAND FISH LIFT PASSAGE	
CHECKED BY CMM	DATE 08/22/2024	INTERCONNECTION DIAGRAM DS BYPASS KNIFE GATE VALVE (DSG15)	
APPROVED BY CMH	DATE 08/22/2024	TECHNOLOGY HYDRO	DRAWING CATEGORY INTERCONNECTS
SCALE NONE		PROJECT NO. ARL-007	DWG EE-GK-015 / REV 0

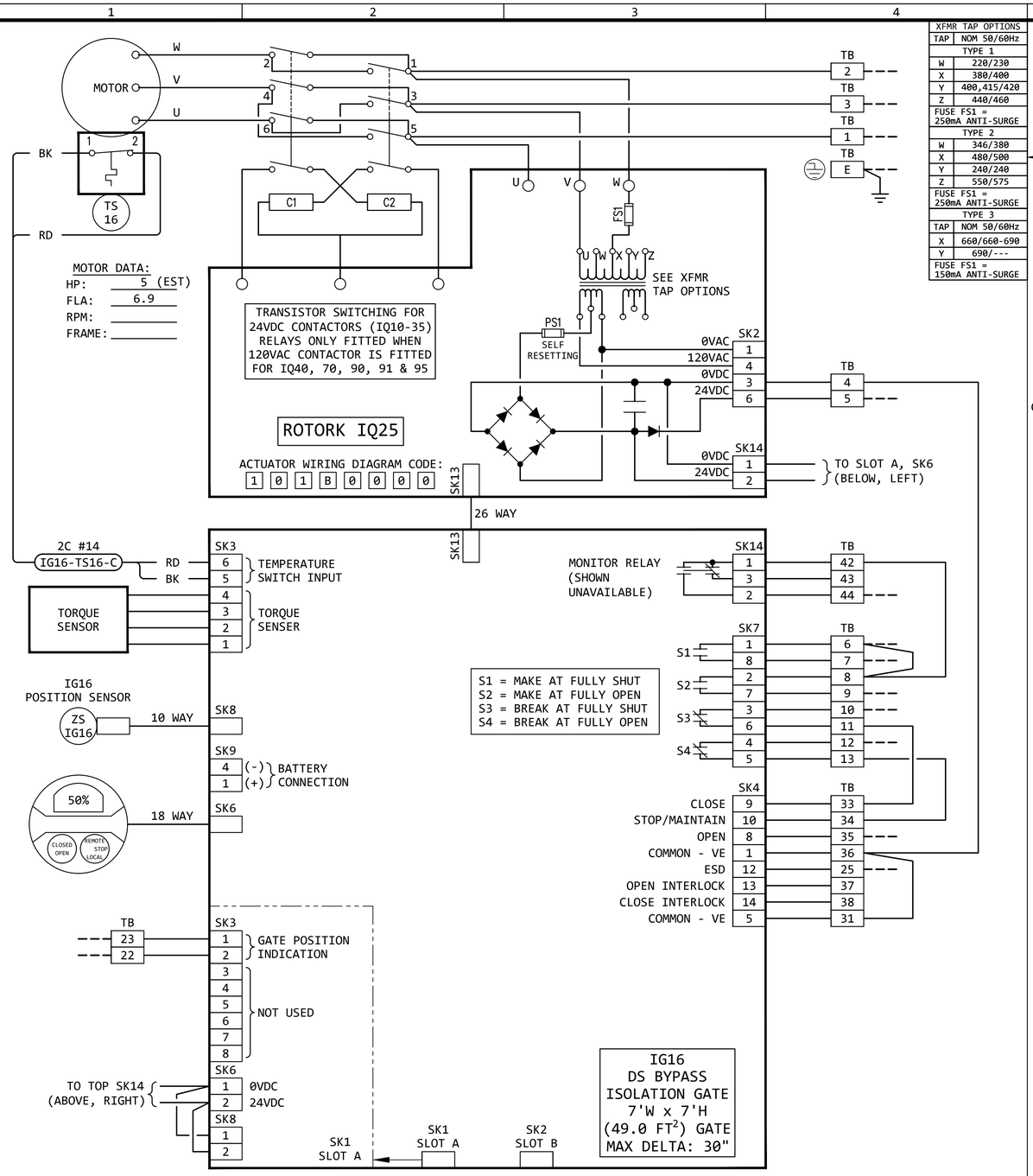

XFMR TAP OPTIONS	
TAP	NOM 50/60Hz
TYPE 1	
W	220/230
X	380/400
Y	400,415/420
Z	440/460
FUSE FS1 = 250mA ANTI-SURGE	
TYPE 2	
W	346/380
X	480/500
Y	240/240
Z	550/575
FUSE FS1 = 250mA ANTI-SURGE	
TYPE 3	
TAP	NOM 50/60Hz
X	660/660-690
Y	690/---
FUSE FS1 = 150mA ANTI-SURGE	

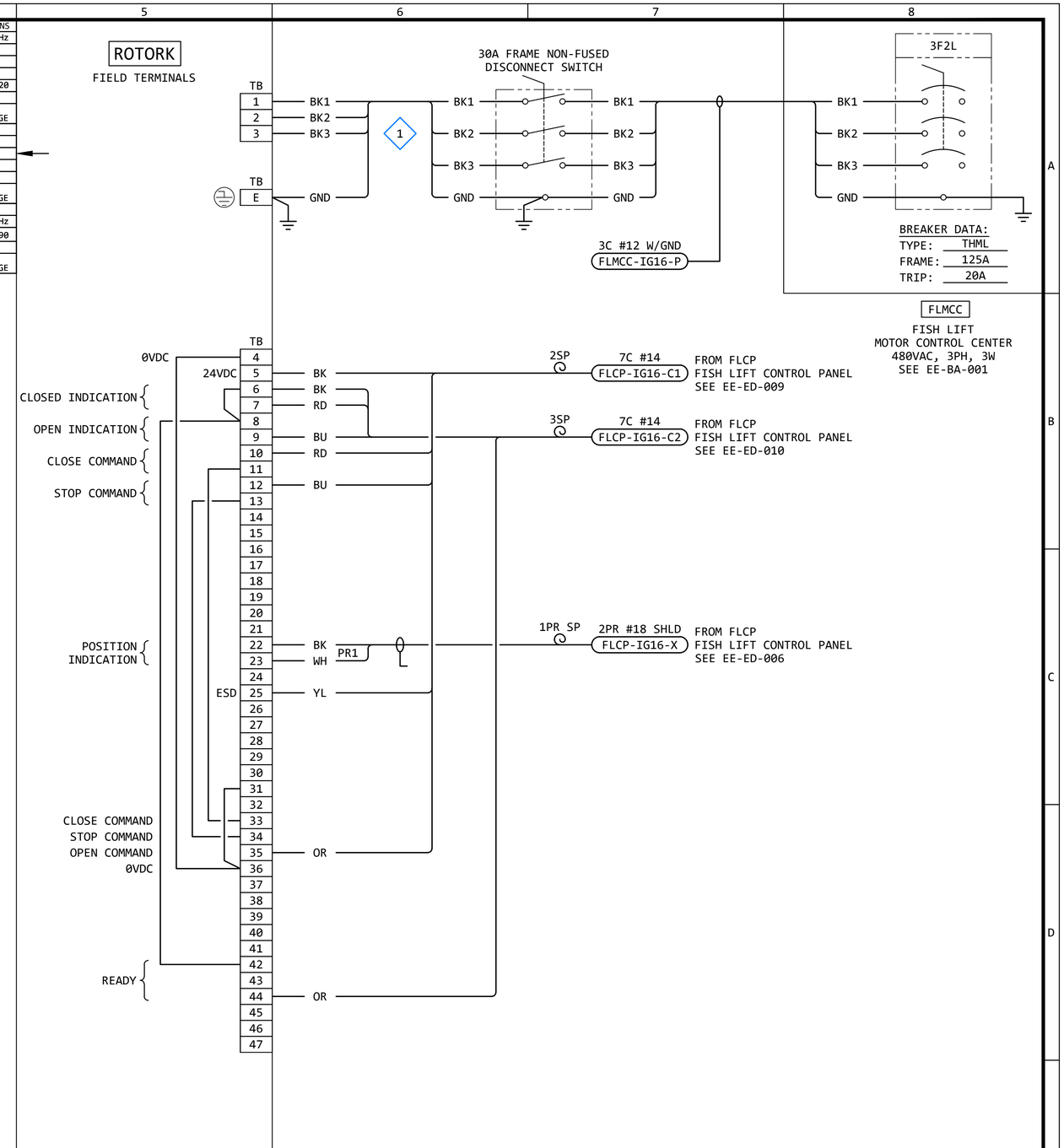

GENERAL NOTES:

1. THE DESIGN SHOWN IS BASED ON ROTORK CIRCUIT DIAGRAM No. 101B0000, ISSUE 6, DATED 160614. SEE EE-DK-001 FOR MORE DETAILS.
2. TERMINAL NUMBERS ARE SUBJECT TO CHANGE. REFER TO CIRCUIT DIAGRAMS SUPPLIED WITH EQUIPMENT.

KEYED NOTES:

1. THE CABLES ON THE LOAD SIDE OF THE DISCONNECT SWITCH SHALL MATCH THE LINE SIDE CABLES.

REVISION

REV	DATE	DR	CK	AP	DESCRIPTION
0	03/28/2025	SAM	CMM	CMH	ISSUED FOR CONSTRUCTION

ECI "Engineering with Distinction" ELECTRICAL CONSULTANTS, INC.

THIS DRAWING IS THE PROPERTY OF ELECTRICAL CONSULTANTS, INC. AND IS TO BE USED ONLY FOR THE SPECIFIC PROJECT IDENTIFIED ON THE DRAWING. NO REVISIONS SHALL BE MADE WITHOUT THE EXPRESSED WRITTEN CONSENT OF ELECTRICAL CONSULTANTS, INC.

DRAWN BY SAM	DATE 08/22/2024	WOODLAND PULP, LLC WOODLAND FISH LIFT PASSAGE
CHECKED BY CMM	DATE 08/22/2024	INTERCONNECTION DIAGRAM DS BYPASS ISOLATION GATE (IG16)
APPROVED BY CMH	DATE 08/22/2024	TECHNOLOGY: HYDRO / DRAWING CATEGORY: INTERCONNECTS
SCALE: NONE	PROJECT NO. ARL-007	DWG: EE-GK-016 / REV: 0

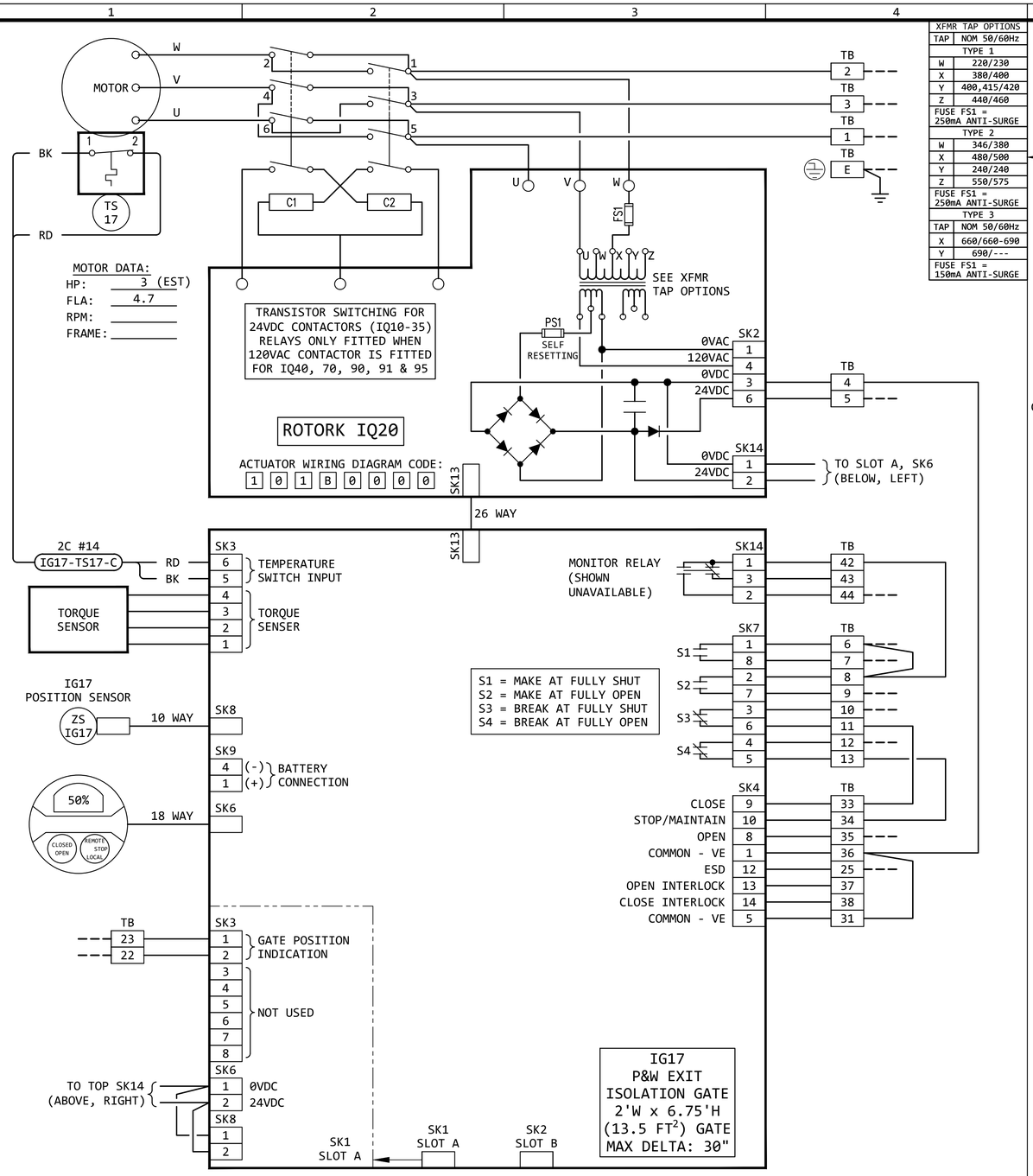

XFMR TAP OPTIONS	
TAP	NOM 50/60Hz
TYPE 1	
W	220/230
X	380/400
Y	400,415/420
Z	440/460
FUSE FS1 = 250mA ANTI-SURGE	
TYPE 2	
W	346/380
X	480/500
Y	240/240
Z	550/575
FUSE FS1 = 250mA ANTI-SURGE	
TYPE 3	
TAP	NOM 50/60Hz
X	660/660-690
Y	690/---
FUSE FS1 = 150mA ANTI-SURGE	

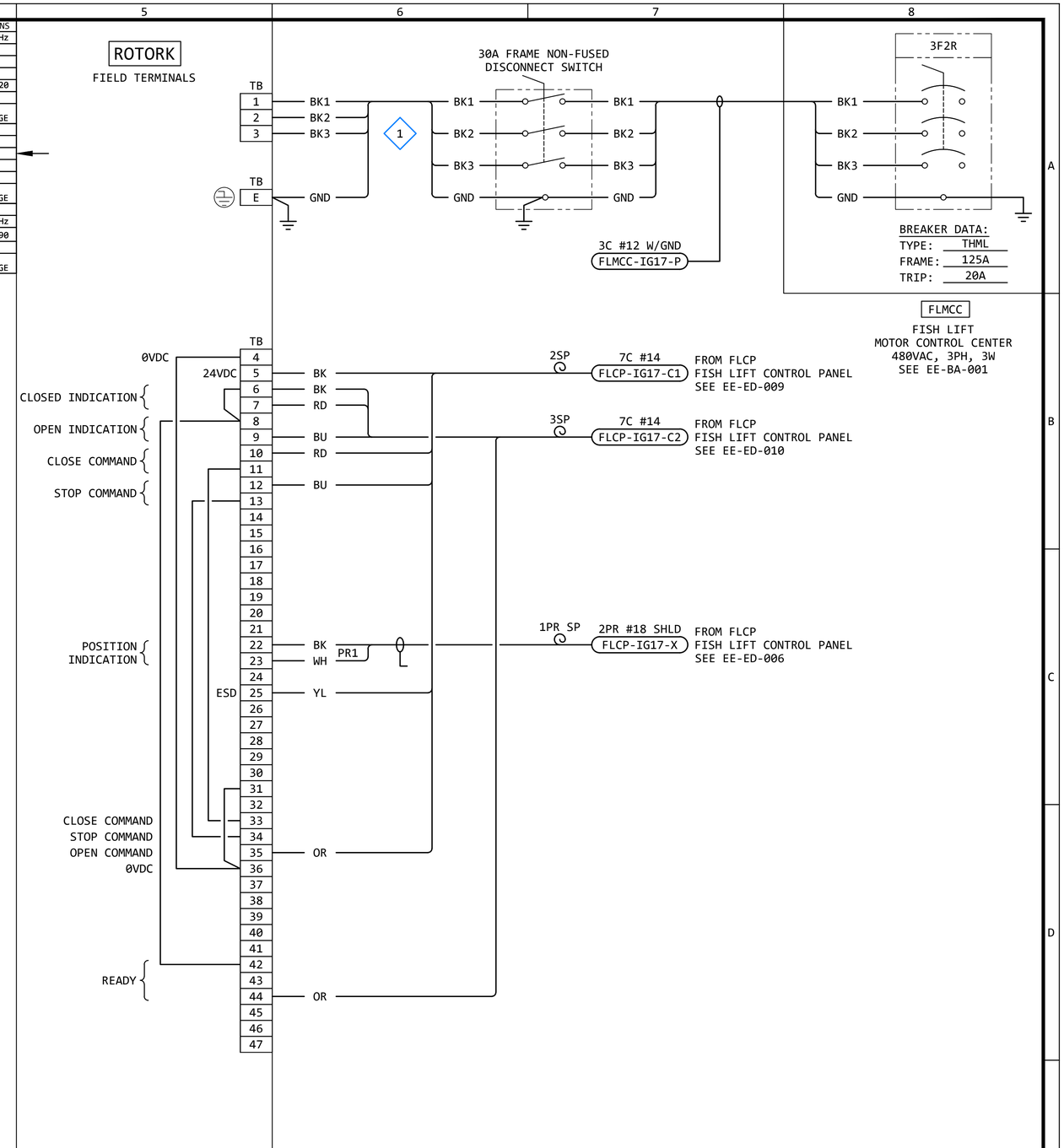

GENERAL NOTES:

1. THE DESIGN SHOWN IS BASED ON ROTORK CIRCUIT DIAGRAM No. 101B0000, ISSUE 6, DATED 160614. SEE EE-DK-001 FOR MORE DETAILS.
2. TERMINAL NUMBERS ARE SUBJECT TO CHANGE. REFER TO CIRCUIT DIAGRAMS SUPPLIED WITH EQUIPMENT.

KEYED NOTES:

1. THE CABLES ON THE LOAD SIDE OF THE DISCONNECT SWITCH SHALL MATCH THE LINE SIDE CABLES.

REVISION

REV	DATE	DR	CK	AP	DESCRIPTION
0	03/28/2025	SAM	CMM	CMH	ISSUED FOR CONSTRUCTION

ECI "Engineering with Distinction" ELECTRICAL CONSULTANTS, INC.

THIS DRAWING IS THE PROPERTY OF ELECTRICAL CONSULTANTS, INC. AND IS TO BE USED ONLY FOR THE SPECIFIC PROJECT IDENTIFIED ON THE DRAWING. NO REVISIONS SHALL BE MADE WITHOUT THE EXPRESSED WRITTEN CONSENT OF ELECTRICAL CONSULTANTS, INC.

DRAWN BY: SAM	DATE: 08/22/2024	WOODLAND PULP, LLC WOODLAND FISH LIFT PASSAGE	
CHECKED BY: CMM	DATE: 08/22/2024	INTERCONNECTION DIAGRAM P&W EXIT ISOLATION GATE (IG17)	
APPROVED BY: CMH	DATE: 08/22/2024	TECHNOLOGY: HYDRO	DRAWING CATEGORY: INTERCONNECTS
SCALE: NONE	PROJECT NO.: ARL-007	DWG: EE-GK-017	REV: 0

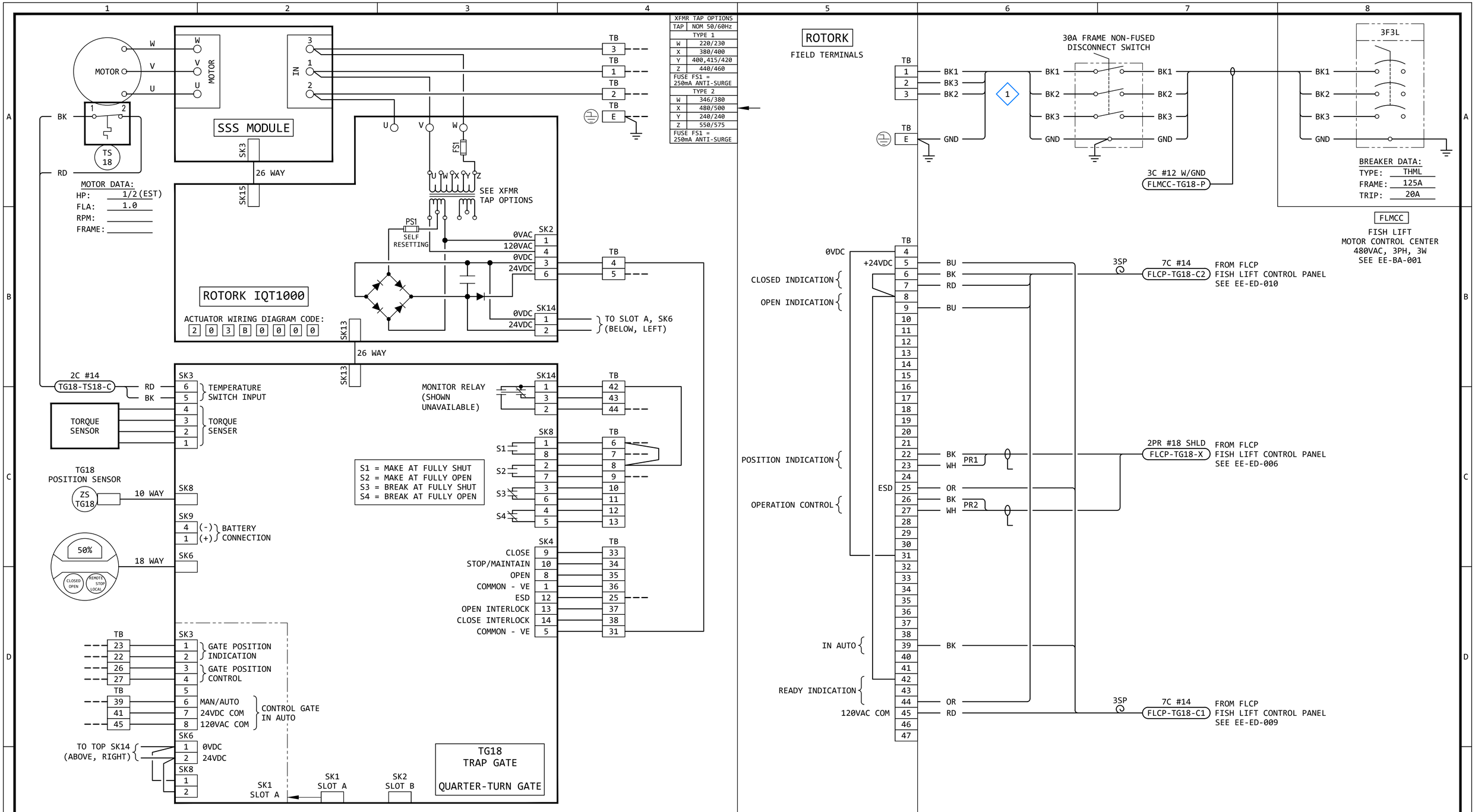

GENERAL NOTES:

1. THE DESIGN SHOWN IS BASED ON ROTORK CIRCUIT DIAGRAM No. 203B0000, ISSUE 6, DATED 290520. SEE EE-DK-002 FOR MORE DETAILS.
2. TERMINAL NUMBERS ARE SUBJECT TO CHANGE. REFER TO CIRCUIT DIAGRAMS SUPPLIED WITH EQUIPMENT.

KEYED NOTES:

1. THE CABLES ON THE LOAD SIDE OF THE DISCONNECT SWITCH SHALL MATCH THE LINE SIDE CABLES.

REVISION

REV	DATE	DR	CK	AP	DESCRIPTION
0	03/28/2025	SAM	CMM	CMH	ISSUED FOR CONSTRUCTION

ECI "Engineering with Distinction" ELECTRICAL CONSULTANTS, INC.

THIS DRAWING IS THE PROPERTY OF ELECTRICAL CONSULTANTS, INC. AND IS TO BE USED ONLY FOR THE SPECIFIC PROJECT IDENTIFIED ON THE DRAWING. NO REVISIONS SHALL BE MADE WITHOUT THE EXPRESSED WRITTEN CONSENT OF ELECTRICAL CONSULTANTS, INC.

DRAWN BY: SAM	DATE: 08/22/2024	WOODLAND PULP, LLC WOODLAND FISH LIFT PASSAGE
CHECKED BY: CMM	DATE: 08/22/2024	INTERCONNECTION DIAGRAM TRAP GATE (TG18)
APPROVED BY: CMH	DATE: 08/22/2024	TECHNOLOGY: HYDRO DRAWING CATEGORY: INTERCONNECTS
SCALE: NONE	PROJECT NO.: ARL-007	DWG: EE-GK-018 REV: 0

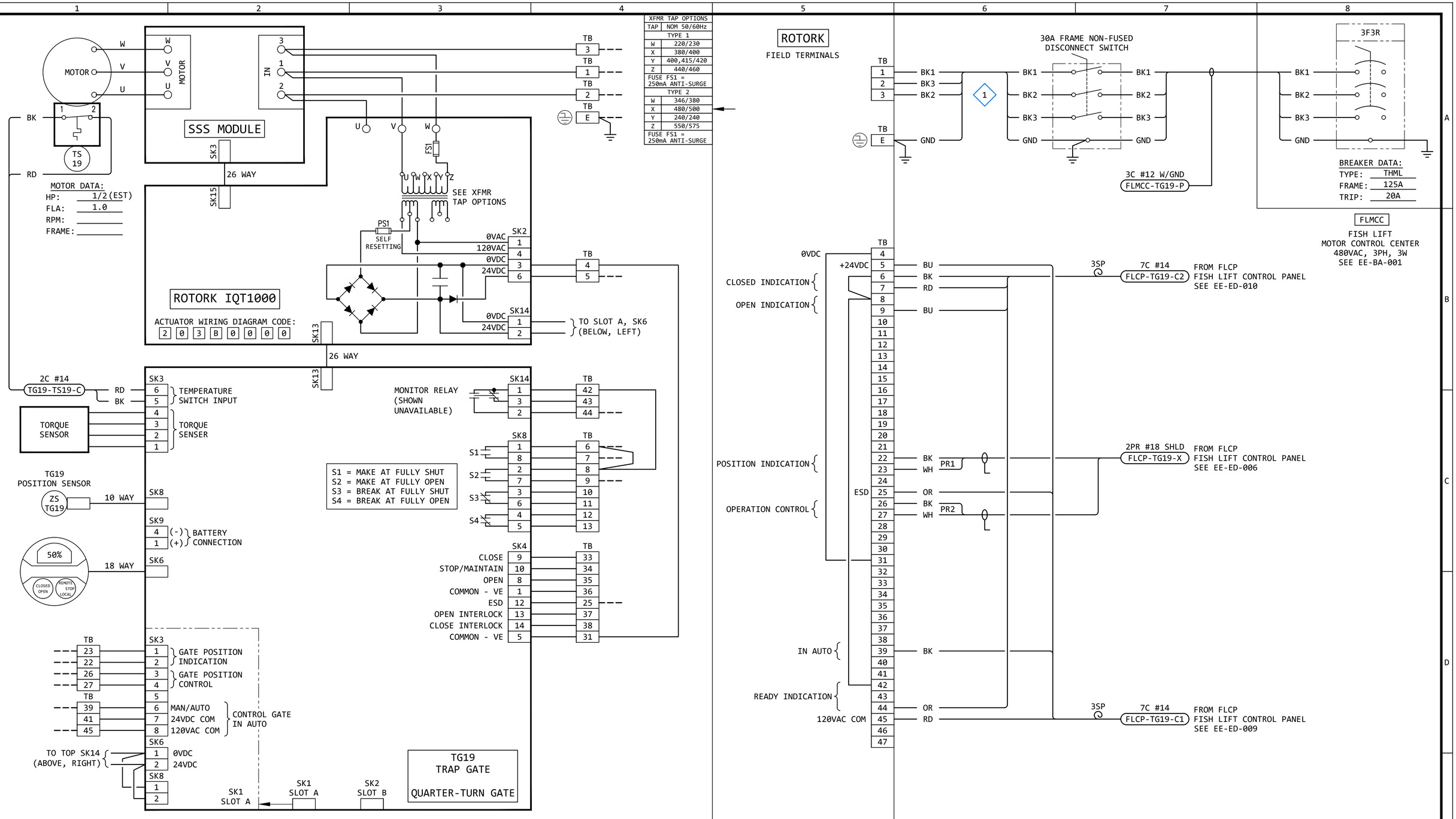

GENERAL NOTES:

1. THE DESIGN SHOWN IS BASED ON ROTORK CIRCUIT DIAGRAM No. 203B0000, ISSUE 6, DATED 290520. SEE EE-DK-002 FOR MORE DETAILS.
2. TERMINAL NUMBERS ARE SUBJECT TO CHANGE. REFER TO CIRCUIT DIAGRAMS SUPPLIED WITH EQUIPMENT.

KEYED NOTES:

1. THE CABLES ON THE LOAD SIDE OF THE DISCONNECT SWITCH SHALL MATCH THE LINE SIDE CABLES.

REVISION

REV	DATE	DR	CK	AP	DESCRIPTION
0	03/28/2025	SAM	CMM	CMH	ISSUED FOR CONSTRUCTION

ECI "Engineering with Distinction" ELECTRICAL CONSULTANTS, INC.

THIS DRAWING IS THE PROPERTY OF ELECTRICAL CONSULTANTS, INC. AND IS TO BE USED ONLY FOR THE SPECIFIC PROJECT IDENTIFIED ON THE DRAWING. NO REVISIONS SHALL BE MADE WITHOUT THE EXPRESSED WRITTEN CONSENT OF ELECTRICAL CONSULTANTS, INC.

DRAWN BY: SAM	DATE: 08/22/2024	WOODLAND PULP, LLC WOODLAND FISH LIFT PASSAGE
CHECKED BY: CMM	DATE: 08/22/2024	INTERCONNECTION DIAGRAM TRAP GATE (TG19)
APPROVED BY: CMH	DATE: 08/22/2024	TECHNOLOGY: HYDRO DRAWING CATEGORY: INTERCONNECTS
SCALE: NONE	PROJECT NO.: ARL-007	DWG: EE-GK-019 REV: 0